Revision History		
Rev	Description	Date
1	Release	4/13/2022
2	Add Fisheye Images, Distortion, Update Formatting	11/11/2022
3	Update Test Positions	3/19/2023
4	Update Title Block	12/15/2024

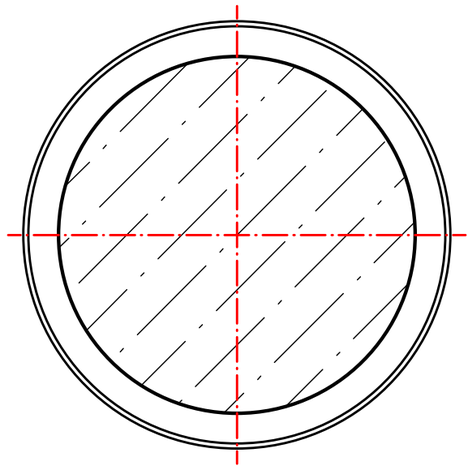

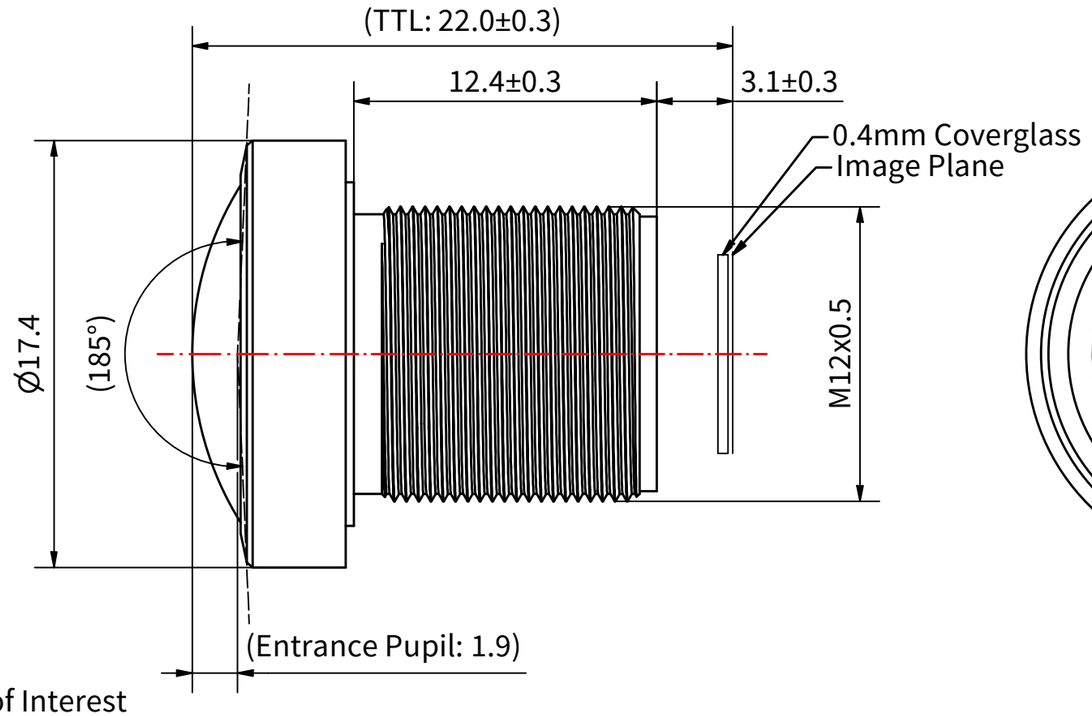

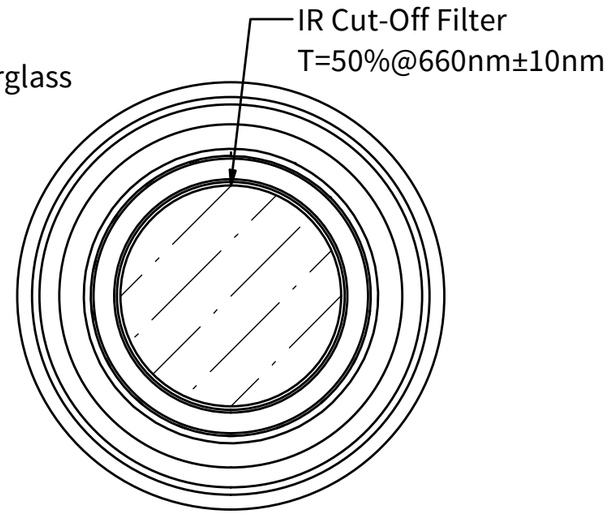

Fisheye Fill Factor on 4:3 Aspect Ratio Region of Interest

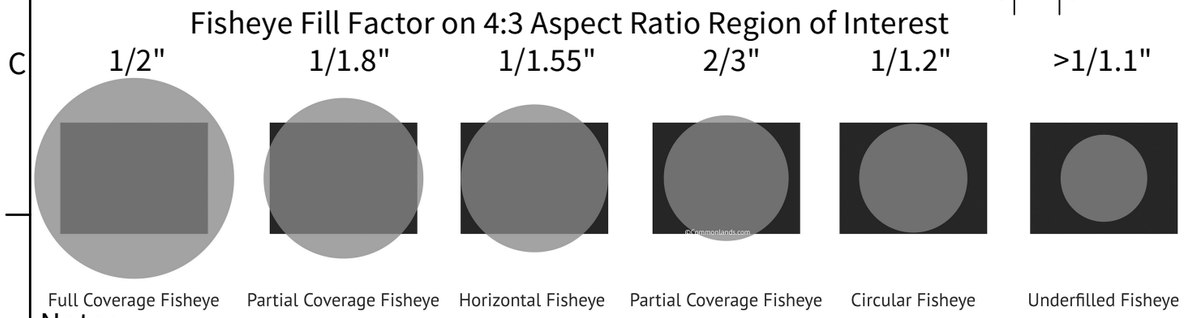

Notes

1.) Dimensions in parentheses are for reference only.

2.) IP67-rated.

3.) IR Cut-Off Filter
- Tavg>=92%@440nm-630nm
- Tmin>=88%@440nm-630nm
- T=50%@650nm~670nm
- T<3%@700-1000nm

4.) Entrance Pupil Position:
- 4.0mm@103°
- 3.1mm@140°
- 1.9mm@185°

	Name	Date
Drawn	Jason Holtkamp	12/15/2024
Checked		
QA Appr.		

Effective Focal Length (EFL): 2.7mm	Format Type: 1/2"	Nominal Resolution: 12MP, 1.55µm
F/#: 2.5	Design Image Circle: 7.8mm	Max Image Circle: 8.2mm
Chief Ray Angle (CRA): 15° @ 8.2mm ImCirc	Operating Temperature: /	Storage Temperature: /
Optical Construction: 8G	Barrel Material: AL6061	Weight: 8g

Image Circle	FOV	Distortion Rectilin.	Distortion F-θ	Distortion TV (4:3)
3.0mm	65°	-12%	-1%	-6%
6.0mm	133°	-51%	-4%	-19%
8.0mm	190°	-113%	-11%	-25%

UNLESS OTHERWISE SPECIFIED DIMENSIONS ARE IN MILLIMETERS
TOLERANCES:
MECHANICAL:
X ± 1
X.X ± 0.1
X.XX ± 0.01
OPTICAL:
±5% OF NOMINAL VALUE
THIRD ANGLE

TITLE: 185°@7.8mm M12 Fisheye Lens

DATE: 12/15/2024

Commonlands LLC
San Diego, CA
+1 (858) 333-7325, engineering@commonlands.com

PART NUMBER: CIL227-F2.5-M12B660

SHEET 1 OF 1

DO NOT SCALE

REV: 4