| Revision History | | |
|---|---|---|
| Rev | Description | Date |
| 1 | Release | 9/20/2024 |

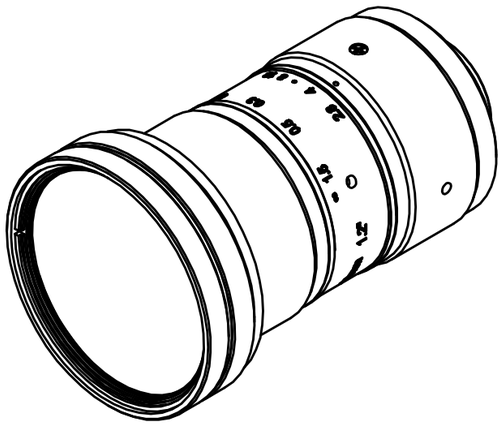

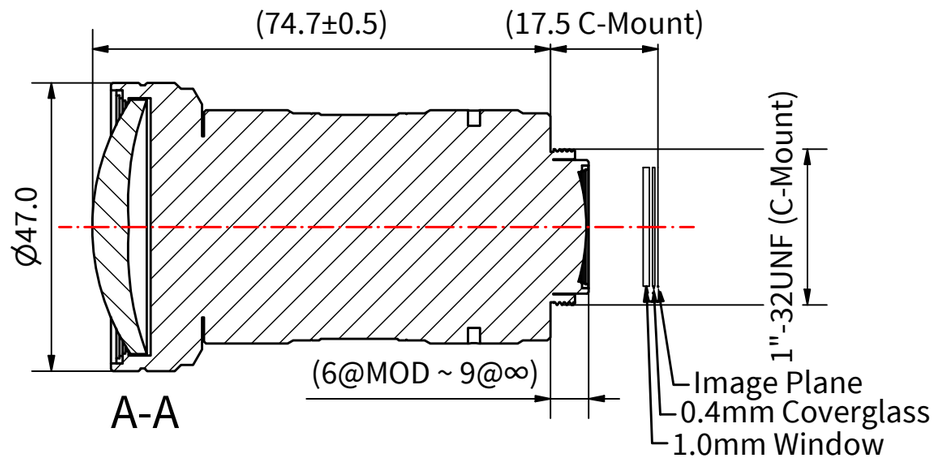


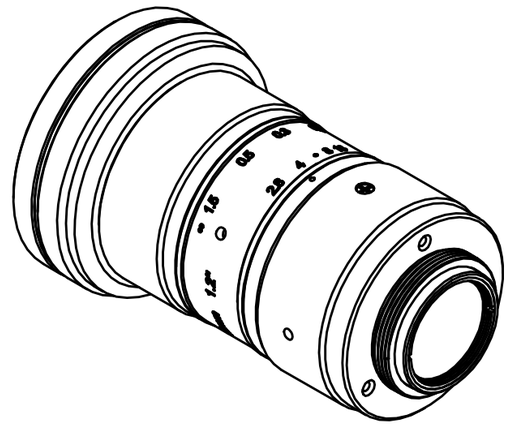

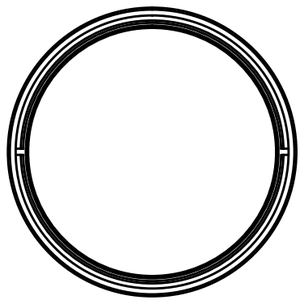

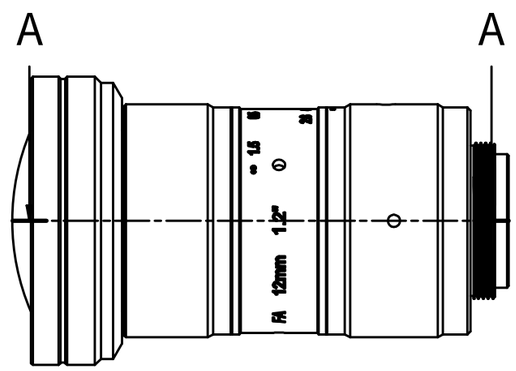


Notes:
1.) Dimensions in parentheses are for reference only.
2.) Must use ≥1mm total glass thickness, including sensor coverglass & protective window.

| | Name | Date |
|---|---|---|
| Drawn | Jason Holtkamp | 9/20/2024 |
| Checked | | |
| QA Appr. | | |

| Image Circle (IC), Format Type | F# minimum | F# maximum |
|---|---|---|
| 19.4mm, 1.2" | 2.8±10% | 16±10% |
| Minimum Obj. Distance (MoD) | Resolution & Pixel Pitch | |
| 100mm | 25MP | |
| Chief Ray Angle at IC | Weight | |
| | 205g | |
| Optical Construction | Barrel Material | |
| Glass | AL6061 | |

| EFL minimum | EFL maximum |
|---|---|
| 12mm | |

| Im.Circle | FoV @ EFLmin | Dist @ EFLmin | FoV @ EFLmax | Dist @ EFLmax |
|---|---|---|---|---|
| | | | | |

Third Angle

Scale: Not To Scale

All Dimensions in mm

Unless otherwise specified
Standard tolerances are:
Optical: X.X ± 5%, X.XX ± 5%
Mechanical: X.X ± 0.1mm

12mm C-Mount Lens

Date: 9/20/2024

**Commonlands LLC**
San Diego, CA
+1 (858) 333-7325, engineering@commonlands.com

# CIL552-F2.8-CMANIR

Rev. 1