TAOGLAS

Datasheet

433MHz ISM Band Terminal Antenna

Part No:
TI.10.0111

Features:

SMA(M) Plug Connector

Low Profile and Robust Handling

48.2mm Antenna Dimensions

IP65 Rated

RoHS and REACH Compliant

1.	Introduction	3
2.	Specifications	4
3.	Antenna Characteristics	5
4.	Radiation Patterns	7
5.	Mechanical Drawing	9
6.	Packaging	10
	Changelog	11

Taoglas makes no warranties based on the accuracy or completeness of the contents of this document and reserves the right to make changes to specifications and product descriptions at any time without notice. Taoglas reserves all rights to this document and the information contained herein. Reproduction, use or disclosure to third parties without express permission is strictly prohibited.

Ireland ISO 9001: 2015 Certified

Taiwan ISO 9001: 2015 Certified

1. Introduction

The TI.10 series are high performance 433MHz omni-directional antennas. The TI.10 terminal SMA plug mount antenna is ideal for mobile small form factor applications. At only 48.2mm in length Omni-directional with a peak gain 0dBi ensures constant reception and transmission. The antenna structure is designed for robust handling and the housing is made with TPE giving reliable performance in tough environments.

2. Specifications

Electrical									
Band	**Frequency (MHz)**	**Efficiency (%)**	**Average Gain (dB)**	**Peak Gain (dBi)**	**Radiation Pattern**	**Impedance**	**VSWR**	**Polarization**	**Power**
ISM Band 433 MHz	433.05~434.79	36	-4.5	-1.4	Omni - Directional	50Ω	≤1.5:1	Linear	5W
*Tested on 150 x 90mm Ground Plane									

Mechanical	
Dimensions	48.2mm X Ø8mm
Housing	TPE
Connector	SMA(M) plug
Weight	8.5g

Environmental	
Operation Temperature	-40°C to + 85°C
Storage Temperature	-40°C to + 105°C
Relative Humidity	40% to 95%

3. Antenna Characteristics

3.1 Return Loss

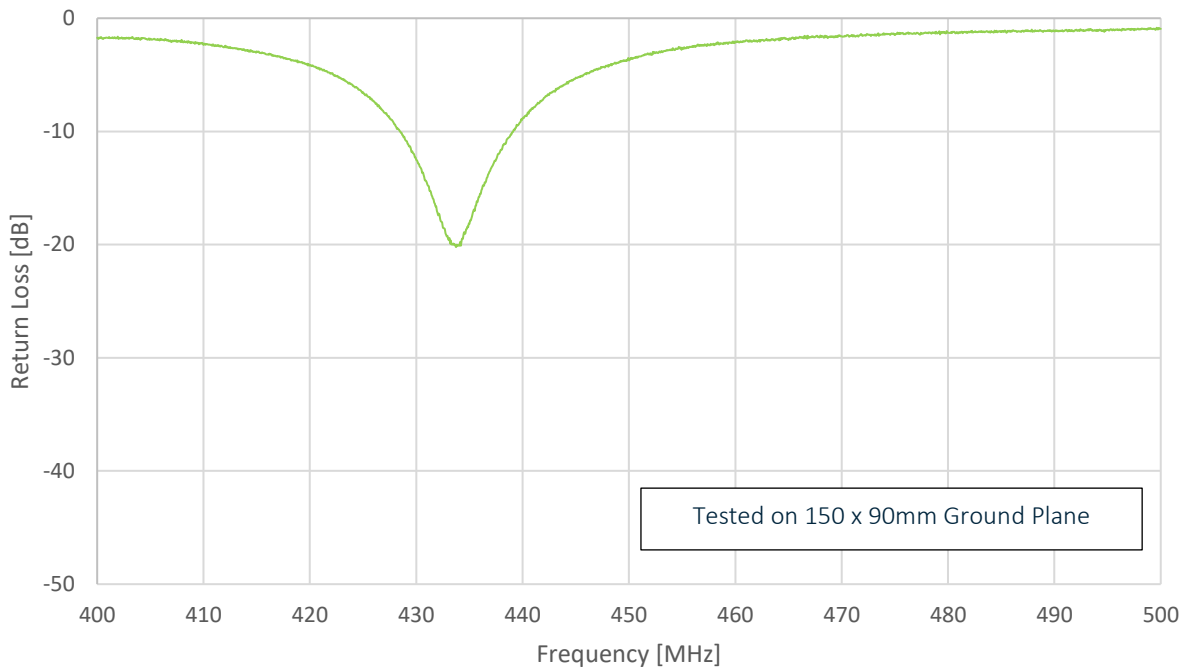

3.2 Efficiency

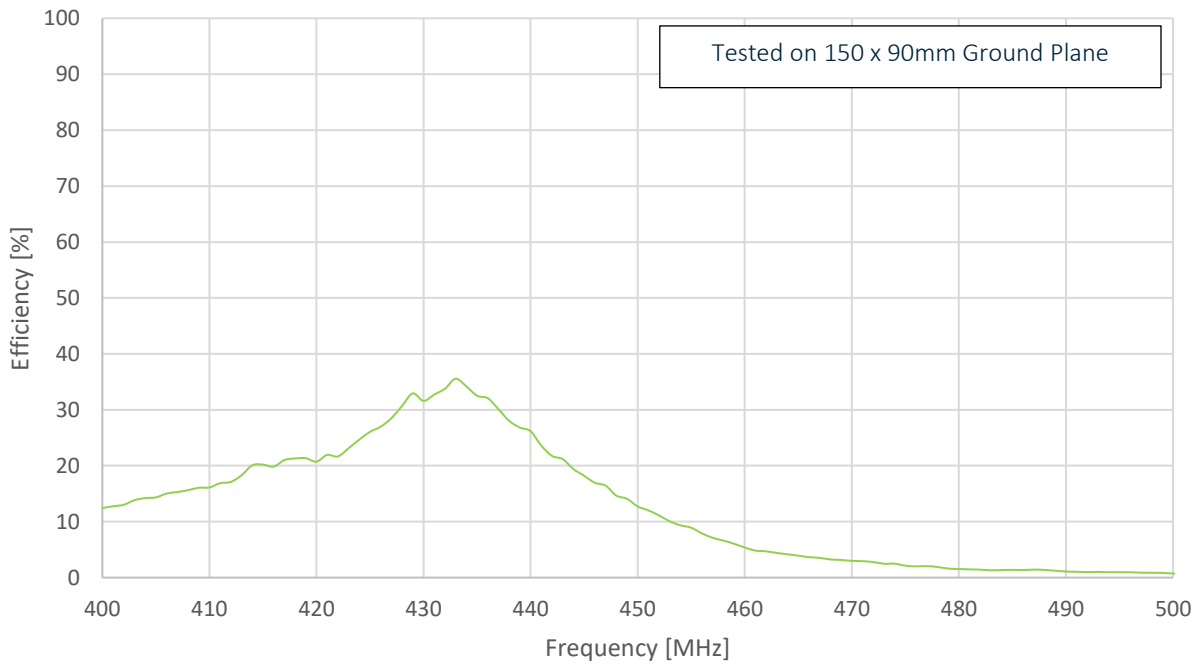

3.3 Average Gain

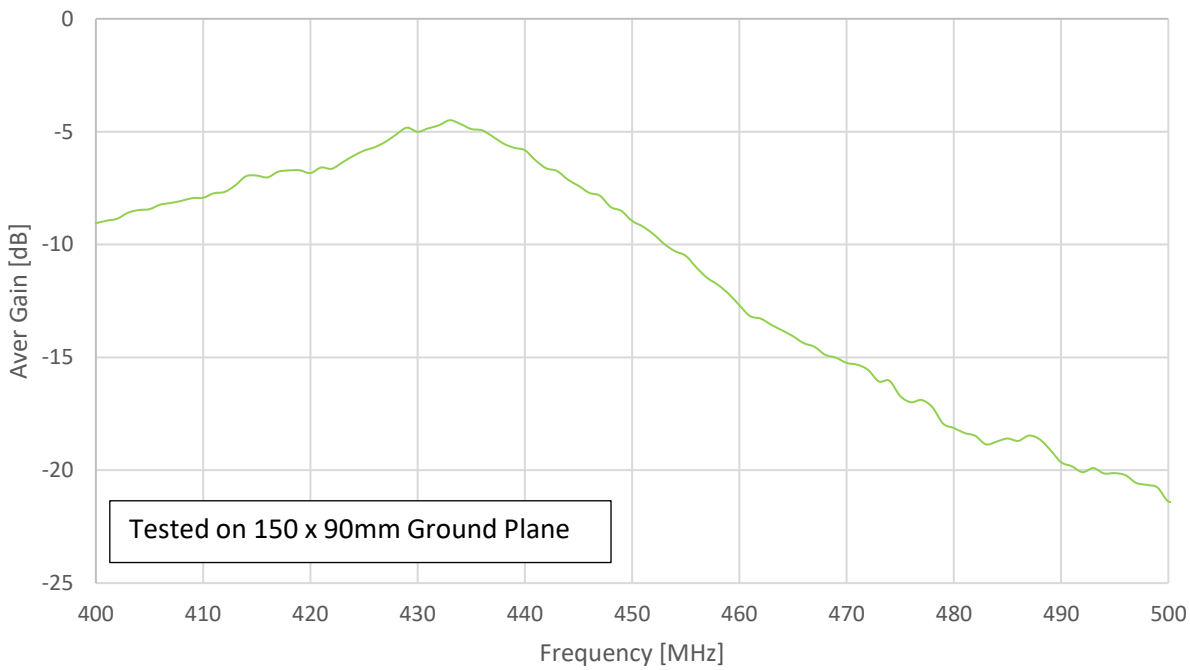

3.4 Peak Gain

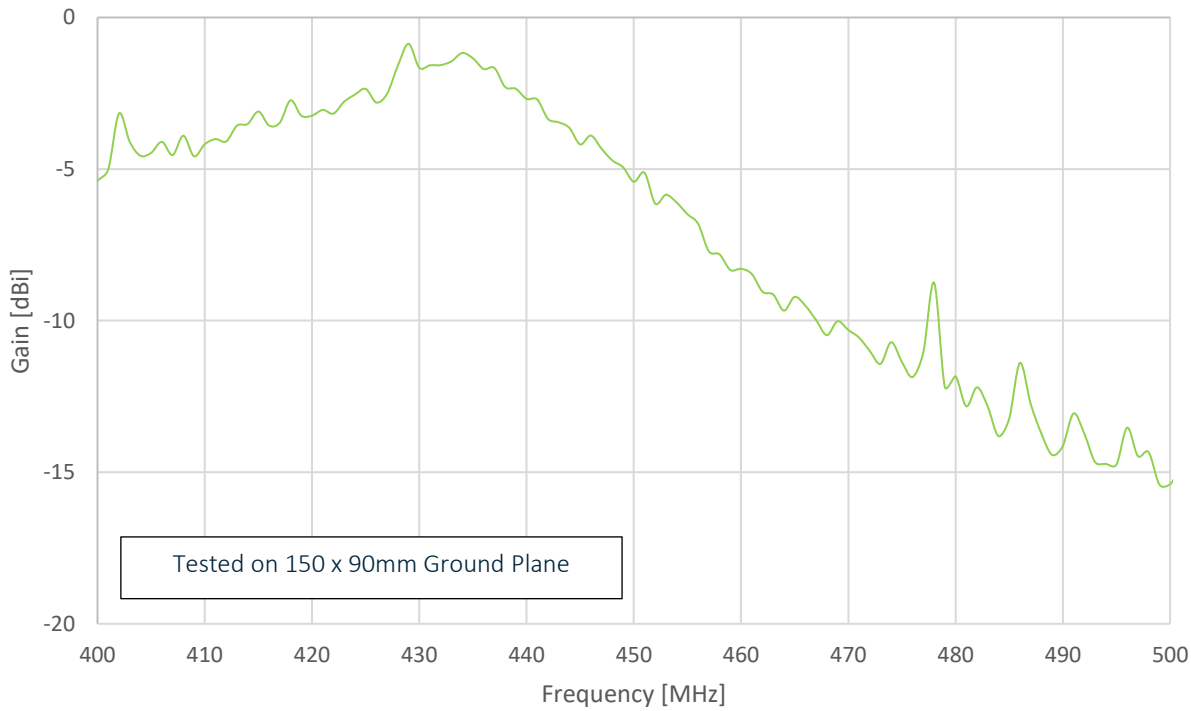

4. Radiation Patterns

4.1 Test Setup

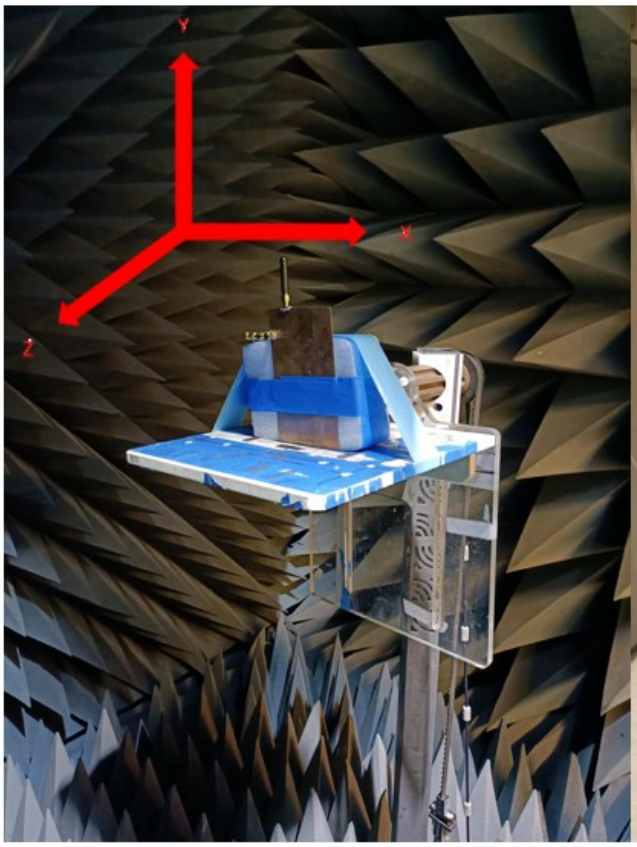

Chamber Setup

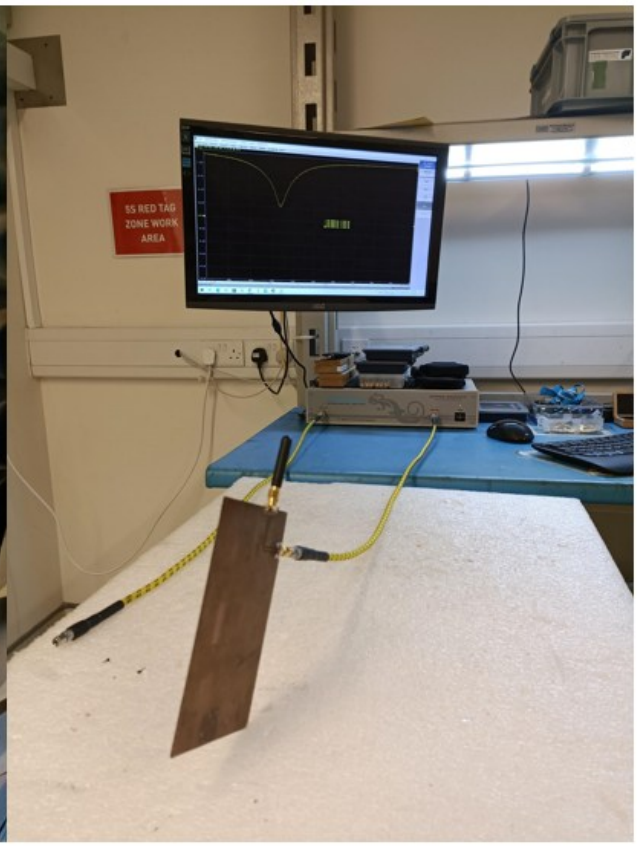

VNA Setup

4.2 433MHz 3D and 2D Radiation Patterns

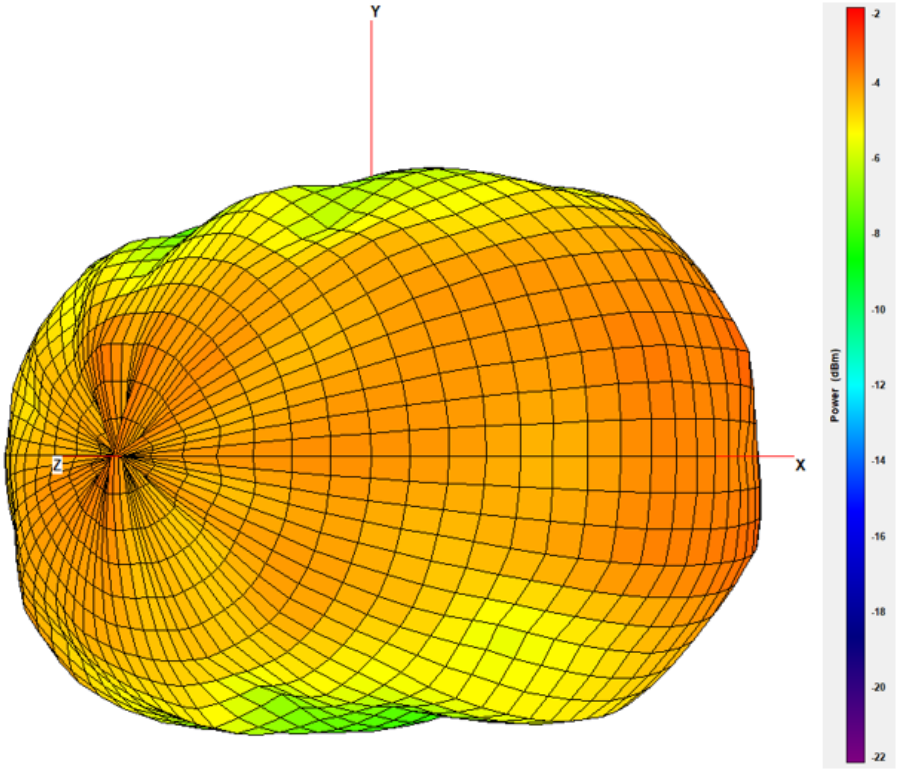

XY Plane	XZ Plane	YZ Plane

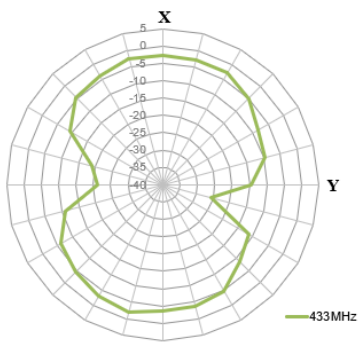

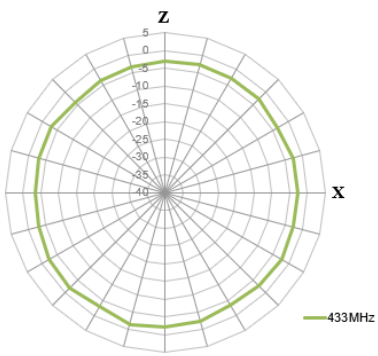

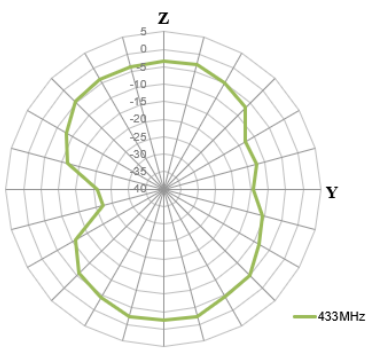

5. Mechanical Drawing (Units: mm)

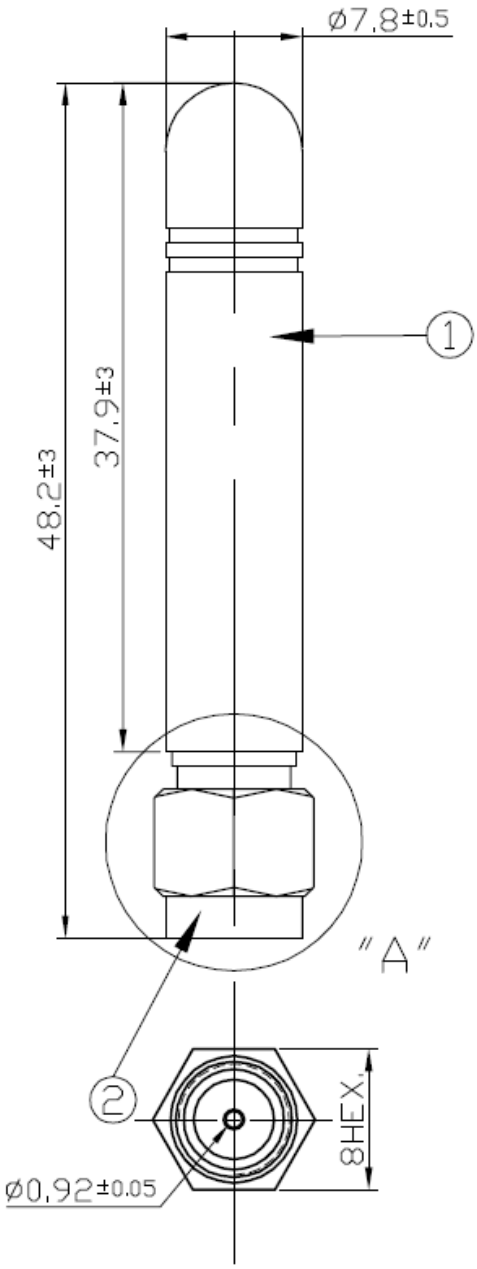

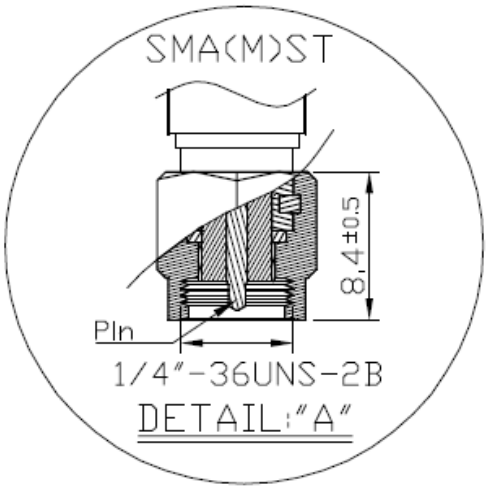

	Name	P/N	Material	Finish	QTY
1	Antenna Cover	000111K030002A	TPU	Black	1
2	SMA(M)ST	200211J000002A	Brass	Gold	1

6. Packaging

1 pcs TI.10.0111 per PE bag
PE Bag Dimensions - 74 x 42mm
Weight - 8g

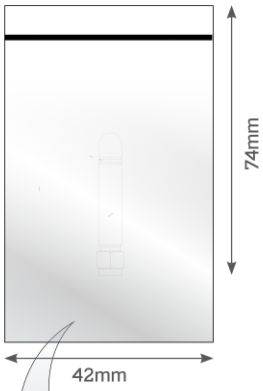

100 PE bags per large PE bags
100 pcs TI.10.0111 per large PE bags
Large PE bags Dimensions - 280 x 180mm
Weight - 810g

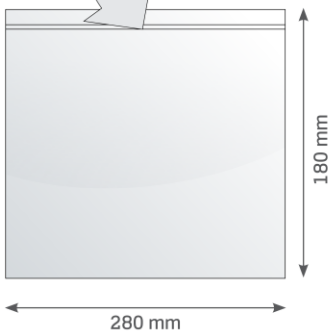

15 Large PE bags per carton
1500 pcs TI.10.0111 per carton
Carton Dimensions - 360 x 310 x 160mm
Weight - 12.5kg

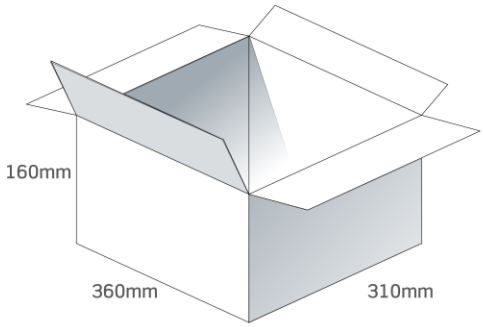

Pallet Dimensions 1200*1000*1480mm
72 Cartons per Pallet
9 Cartons per layer
8 Layers

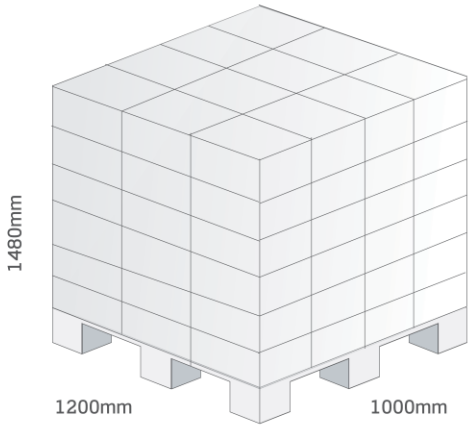

Changelog for the datasheet

SPE-13-8-035 – TI.10.0111

Revision: C (Current Version)	
Date:	2024-12-04
Changes:	Added test setup description
Changes Made by:	Gary West

Previous Revisions

Revision: B	
Date:	2022-01-20
Changes:	Full data & datasheet update
Changes Made by:	Gary West

Revision: A (Original First Release)	
Date:	2013-05-01
Notes:	
Author:	Technical Writer

Previous Revisions (Continued)

TAOGLAS®

www.taoglas.com

© Taoglas