# High Reliability Surface Mount Capacitors, MIL-PRF-32535, 4 – 100 VDC (X7R Dielectric)

## Overview

The KEMET MIL-PRF-32535 X7R surface mount capacitors are designed, tested and screened to meet demanding high reliability defense and aerospace applications. MIL-PRF-32535 is Defense Logistics Agency's (DLA) first capacitor specification for defense and aerospace that capitalizes on industry leading base metal electrode (BME) technology. Qualified under performance specification, MIL-PRF-32535 and QPL listed, this series meets or exceeds the requirements outlined by DLA and is currently available in M (standard reliability) and T (high reliability) product levels. Driven by the demand for higher capacitance and smaller case size MLCCs in high reliability applications, KEMET's MIL-PRF-32535 X7R provides over an 55-fold increase in capacitance over MIL-PRF-55681 and MIL-PRF-123, allowing for reduced board space and continuing the trend for miniaturization.

In addition to being the first BME X7R dielectric qualified for use in defense and aerospace applications, MIL-PRF-32535 is the first DLA specification to recognize a flexible termination option. KEMET's flexible termination utilizes a pliable and conductive silver epoxy between the base metal and nickel barrier layers of the termination system. The addition of this epoxy layer inhibits the transfer of board stress to the rigid ceramic body, therefore mitigating flex cracks, which can result in a low IR or short circuit failures.

## Benefits

- Patented BME technology
- Qualified per MIL-PRF-32535 (QPL)
- Standard reliability (M Level)
- High reliability (T Level)
- Flexible termination option available
- EIA 0402, 0603, 0805, 1206, 1210, 1812, 2220 case sizes
- DC voltage ratings of 4 V, 6.3 V, 10 V, 16 V, 25 V, 50 V, and 100 V
- Capacitance offerings ranging from 39 pF up to 10 uF
- Available capacitance tolerances of ±5%, ±10% and 20%
- Non-polar device, minimizing installation concerns

## Applications

- Decoupling
- Bypass
- Filtering
- Transient voltage suppression


© KEMET Electronics Corporation • One East Broward Boulevard
Fort Lauderdale, FL 33301 USA • 954-766-2800 • www.kemet.com

## MIL-PRF-32535 Ordering Information

| M32535 | 04 | E2 | Z | 103 | K | Z | M | B |
|---|---|---|---|---|---|---|---|---|
| MIL Prefix | Slash Sheet | Characteristic/ Dielectric | Rated Voltage (VDC) | Capacitance Code (pF) | Capacitance Tolerance | Termination[1, 2, 3, 4, 5] | Product Level | Electrode |
| | 02 = 0402<br>03 = 0603<br>04 = 0805<br>05 = 1206<br>06 = 1210<br>07 = 1812<br>08 = 2220 | E2 = X7R | V = 4<br>W = 6.3<br>X = 10<br>Y = 16<br>Z = 25<br>A = 50<br>B = 100 | Two significant digits and number of zeros. | J = ±5%<br>K = ±10%<br>M = ±20% | D = Sn/Pb solder dipped<br>G = Nickel gold-plating<br>R = Flexible termination with solder plating<br>V = Flexible termination with nickel gold-plating<br>Z = Sn/Pb solder plated | M = M Level<br>T = T Level | B = BME |

*[1] Termination options D, R, and V are not available in EIA 0402 case size.*
*[2] Termination option D is not available in EIA 0603 case size.*
*[3] Termination options D, G, and Z are not available in EIA 1812 case size.*
*[4] Termination options D, G and Z are not available for 100 V.*
*[5] Termination options D, G and Z are not available in EIA 2220 case size for 50 V.*

## KEMET Part Number Equivalent (For Reference Only)

(Do not use this ordering code if a QPL MIL-SPEC part type is required. Please order using MIL-SPEC ordering code. Details regarding MIL-PRF-32535 QPL ordering information is outlined above.)

| C | 0805 | K | 104 | J | 3 | R | M | L | - |
|---|---|---|---|---|---|---|---|---|---|
| Ceramic | Case Size (L" x W") | Specification/ Series | Capacitance Code (pF) | Capacitance Tolerance[2] | Rated Voltage (VDC) | Dielectric | Product Level | Termination Finish | Packaging/ Grade (C-Spec) |
| | 0402<br>0603<br>0805<br>1206<br>1210<br>1812<br>2220 | K = MIL-PRF-32535 | Two significant digits and number of zeros. | J = ±5%<br>K = ±10%<br>M = ±20% | 7 = 4<br>9 = 6.3<br>8 = 10<br>4 = 16<br>3 = 25<br>5 = 50<br>1 = 100 | R = X7R | M = M Level standard termination<br>N = M Level flexible termination<br>T = T Level standard termination<br>V = T Level flexible termination | L = Sn/Pb solder plated<br>H = Sn/Pb solder dipped<br>G = Nickel gold-plating | See "Packaging C-Spec Ordering Options Table" |

## Packaging C-Spec Ordering Options Table

| Packaging Type[1] | Packaging/Grade Ordering Code (C-Spec) |
|---|---|
| Standard Packaging (Waffle Tray) | Not required (blank) |
| 7" Tape & Reel | Contact Sales |

[1] *Default packaging with no C-Spec is "Waffle Tray," and is recommended for order quantities of less than 250 pieces. See Waffle Tray packaging information section for additional details.*

[1] *See Tape & Reel Packaging information section of the datasheet for additional details.*

## Dimensions per MIL-PRF-32535 – Inches (Millimeters)

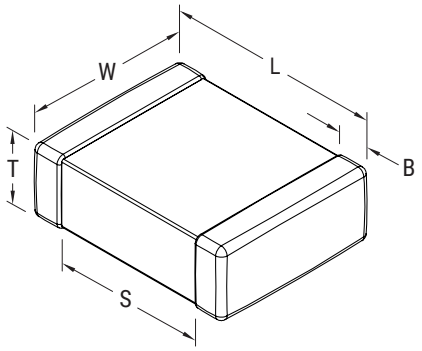


| EIA Size Code | Metric Size Code | L Length | W Width | T Thickness (Max) | B Bandwidth | Maximum Part Weight (mg)[5] | Mounting Technique |
|---|---|---|---|---|---|---|---|
| 0402[1] | 1005 | 0.040 +0.006/-0.004 (1.02 +0.15/-0.10) | 0.020 +0.005/-0.004 (0.51 +0.13/-0.10) | 0.025 (0.64) | 0.004 (0.100) Minimum | 1.6 | Solder reflow only |
| 0603[2] | 1608 | 0.063 +0.008/-0.006 (1.60 +0.20/-0.15) | 0.032 +0.008/-0.006 (0.81 +0.20/-0.15) | 0.040 (1.02) | 0.016 ±0.008 (0.41±0.20) | 6.3 | Solder wave or solder reflow |
| 0805[2] | 2012 | 0.079 +0.012/-0.010 (2.01 +0.30/-0.25) | 0.050 +0.012/-0.010 (1.27 +0.30/-0.25) | 0.062 (1.57) | 0.020±0.010 (0.51±0.25) | 20 | |
| 1206[3] | 3216 | 0.126 +0.012/-0.010 (3.20 +0.30/-0.25) | 0.063 +0.012/-0.010 (1.60 +0.30/-0.25) | 0.071 (1.80) | 0.020±0.014 (0.51±0.36) | 57 | |
| 1210[4] | 3225 | 0.126+0.012/-0.010 (3.20+0.30/-0.25) | 0.098+0.012/-0.010 (2.49+0.30/-0.25) | 0.110 (2.79) | 0.020±0.014 (0.51±0.36) | 108 | Solder reflow only |
| 1812[3] | 4532 | 0.178±0.012 (4.52±0.30) | 0.126±0.012 (3.20±0.30) | 0.110 (2.79) | 0.024±0.018 (0.61±0.46) | 216 | |
| 2220[3] | 5650 | 0.224±0.016 (5.69±0.41) | 0.197±0.016 (5.00±0.41) | 0.110 (2.79) | 0.025±0.018 (0.64±0.46) | 430 | |

[1] *For EIA 0402 minimum spacing between metalized end terminals is 0.010 (0.25).*

[2] *For EIA 0603 and 0805 solder dipped termination finish, add 0.020 (0.51) to the positive length tolerance and 0.015 (0.38) to the positive width and thickness tolerance.*

[3] *For EIA 1206, 1812 and 2220 solder dipped termination finishes, add 0.025 (0.64) to the positive length tolerance and 0.015 (0.38) to the positive width and thickness tolerance.*

[4] *For EIA 1210 solder dipped termination finishes, add 0.020 (0.51) to the positive length tolerance and 0.015 (0.38) to the positive width and thickness tolerance.*

[5] *Max Part Weight represents the maximum weight in the given case size for all voltages.*

## Environmental Compliance

These devices are RoHS compliant only if ordered with gold (Au) termination finish.

## Electrical Parameters/Characteristics

<table>
<tr><th>Item</th><th>Parameters/Characteristics</th></tr>
<tr><td>Operating temperature range</td><td>−55°C to +125°C</td></tr>
<tr><td>Capacitance change with reference to +25°C and 0 VDC applied (TCC)</td><td>±15%</td></tr>
<tr><td>Aging rate (maximum % capacitance loss/decade hour)</td><td>3%</td></tr>
<tr><td>[1]Dielectric Withstanding Voltage (DWV)</td><td>250% of rated voltage<br>(5 ±1 seconds and charge/discharge not exceeding 50 mA)</td></tr>
<tr><td>[2]Dissipation Factor (DF) maximum limit at 25°C</td><td>
<table>
<tr><th colspan="6">Maximum Allowable DF (%)</th></tr>
<tr><th colspan="6">Rated Voltage (VDC)</th></tr>
<tr><td>4</td><td>6.3</td><td>10</td><td>16</td><td>25</td><td>≥ 50</td></tr>
<tr><td>7.5</td><td>7.5</td><td>5.0</td><td>3.5</td><td>3.5</td><td>2.5</td></tr>
</table>
</td></tr>
<tr><td>[3]Insulation Resistance (IR) minimum limit at 25°C</td><td>Rated voltage < 25 V<br>500 MΩ µF or 100 GΩ, whichever is less<br>Rated voltage ≥ 25 V<br>1,000 MΩ µF or 100 GΩ, whichever is less<br>(Rated voltage applied for 120 seconds maximum at 25°C)</td></tr>
</table>

*[1] DWV is the voltage a capacitor can withstand (survive) for a short period of time. It exceeds the nominal and continuous working voltage of the capacitor.*

*[2] Capacitance and dissipation factor (DF) measured under the following conditions:*
*1 MHz ±100 kHz and 1.0 $V_{rms}$ ±0.2 V if capacitance ≤ 1,000 pF*
*1 kHz ±50 Hz and 1.0 $V_{rms}$ ±0.2 V if capacitance > 1,000 pF*

*[3] To obtain IR limit, divide MΩ-µF value by the capacitance and compare to GΩ limit. Select the lower of the two limits.*

*Capacitance and dissipation factor (DF) measured under the following conditions:*

*Note: When measuring capacitance it is important to ensure the set voltage level is held constant. The HP4284 and Agilent E4980 have a feature known as automatic level control (ALC). The ALC feature should be switched to "ON."*

## Table 1A – Capacitance Range/Selection Waterfall (0402 – 0805 Case Sizes)

| Capacitance | Cap Code | Case Size | | | 0402 | | | | | | 0603 | | | | | | 0805 | | | | | | |
|---|---|---|---|---|---|---|---|---|---|---|---|---|---|---|---|---|---|---|---|---|---|---|---|
| | | Voltage Code (MIL) | | | V | W | X | Y | Z | A | V | W | X | Y | Z | A | V | W | X | Y | Z | A | B |
| | | Voltage Code (KEMET) | | | 7 | 9 | 8 | 4 | 3 | 5 | 7 | 9 | 8 | 4 | 3 | 5 | 7 | 9 | 8 | 4 | 3 | 5 | 1 |
| | | Rated Voltage (VDC) | | | 4 | 6.3 | 10 | 16 | 25 | 50 | 4 | 6.3 | 10 | 16 | 25 | 50 | 4 | 6.3 | 10 | 16 | 25 | 50 | 100 |
| | | Capacitance Tolerance | | | Product Availability | | | | | | | | | | | | | | | | | | |
| 39 pF | 390 | J | K | M | • | • | • | • | • | • | | | | | | | | | | | | | |
| 47 pF | 470 | J | K | M | • | • | • | • | • | • | | | | | | | | | | | | | |
| 56 pF | 560 | J | K | M | • | • | • | • | • | • | | | | | | | | | | | | | |
| 68 pF | 680 | J | K | M | • | • | • | • | • | • | | | | | | | | | | | | | |
| 82 pF | 820 | J | K | M | • | • | • | • | • | • | | | | | | | | | | | | | |
| 100 pF | 101 | J | K | M | • | • | • | • | • | • | | | | | | | | | | | | | |
| 120 pF | 121 | J | K | M | • | • | • | • | • | • | | | | | | | | | | | | | |
| 150 pF | 151 | J | K | M | • | • | • | • | • | • | | | | | | | | | | | | | |
| 180 pF | 181 | J | K | M | • | • | • | • | • | • | | | | | | | | | | | | | |
| 220 pF | 221 | J | K | M | • | • | • | • | • | • | | | | | | | | | | | | | |
| 270 pF | 271 | J | K | M | • | • | • | • | • | • | | | | | | | | | | | | | |
| 330 pF | 331 | J | K | M | • | • | • | • | • | • | | | | | | | | | | | | | |
| 390 pF | 391 | J | K | M | • | • | • | • | • | • | | | | | | | | | | | | | |
| 470 pF | 471 | J | K | M | • | • | • | • | • | • | | | | | | | | | | | | | |
| 560 pF | 561 | J | K | M | • | • | • | • | • | • | | | | | | | | | | | | | |
| 680 pF | 681 | J | K | M | • | • | • | • | • | • | | | | | | | | | | | | | |
| 820 pF | 821 | J | K | M | • | • | • | • | • | • | | | | | | | | | | | | | |
| 1,000 pF | 102 | J | K | M | • | • | • | • | • | • | • | • | • | • | • | • | | | | | | | |
| 1,200 pF | 122 | J | K | M | • | • | • | • | • | • | • | • | • | • | • | • | | | | | | | |
| 1,500 pF | 152 | J | K | M | • | • | • | • | • | • | • | • | • | • | • | • | | | | | | | |
| 1,800 pF | 182 | J | K | M | • | • | • | • | • | • | • | • | • | • | • | • | | | | | | | |
| 2,200 pF | 222 | J | K | M | • | • | • | • | • | • | • | • | • | • | • | • | | | | | | | |
| 2,700 pF | 272 | J | K | M | • | • | • | • | • | • | • | • | • | • | • | • | | | | | | | |
| 3,300 pF | 332 | J | K | M | • | • | • | • | • | • | • | • | • | • | • | • | | | | | | | |
| 3,900 pF | 392 | J | K | M | • | • | • | • | • | • | • | • | • | • | • | • | | | | | | | |
| 4,700 pF | 472 | J | K | M | • | • | • | • | • | • | • | • | • | • | • | • | | | | | | | |
| 5,600 pF | 562 | J | K | M | • | • | • | • | • | • | • | • | • | • | • | • | | | | | | | |
| 6,800 pF | 682 | J | K | M | • | • | • | • | • | • | • | • | • | • | • | • | | | | | | | |
| 8,200 pF | 822 | J | K | M | • | • | • | • | • | | • | • | • | • | • | • | | | | | | | |
| 10,000 pF | 103 | J | K | M | • | • | • | • | • | | • | • | • | • | • | • | • | • | • | • | • | • | •[1] |
| 12,000 pF | 123 | J | K | M | • | • | • | • | • | | • | • | • | • | • | • | • | • | • | • | • | • | •[1] |
| 15,000 pF | 153 | J | K | M | • | • | • | • | • | | • | • | • | • | • | • | • | • | • | • | • | • | •[1] |
| 18,000 pF | 183 | J | K | M | • | • | • | • | • | | • | • | • | • | • | • | • | • | • | • | • | • | •[1] |
| 22,000 pF | 223 | J | K | M | • | • | • | • | • | | • | • | • | • | • | • | • | • | • | • | • | • | •[1] |
| 27,000 pF | 273 | J | K | M | • | • | • | | | | • | • | • | • | • | • | • | • | • | • | • | • | •[1] |
| 33000 pF | 333 | J | K | M | • | • | • | | | | • | • | • | • | • | • | • | • | • | • | • | • | •[1] |
| 39,000 pF | 393 | J | K | M | • | • | • | | | | • | • | • | • | • | • | • | • | • | • | • | • | •[1] |
| 47,000 pF | 473 | J | K | M | • | • | • | | | | • | • | • | • | • | • | • | • | • | • | • | • | •[1] |
| 51,000 pF | 513 | J | K | M | | | | | | | • | • | • | • | • | | | | | | | | |
| 56,000 pF | 563 | J | K | M | | | | | | | • | • | • | • | • | | • | • | • | • | • | • | •[1] |
| 68,000 pF | 683 | J | K | M | | | | | | | • | • | • | • | • | | • | • | • | • | • | • | |
| 82,000 pF | 823 | J | K | M | | | | | | | • | • | • | • | • | | • | • | • | • | • | • | |
| 100,000 pF | 104 | J | K | M | | | | | | | • | • | • | • | • | | • | • | • | • | • | • | |
| 120,000 pF | 124 | J | K | M | | | | | | | • | • | • | • | • | | • | • | • | • | • | • | |
| 150,000 pF | 154 | J | K | M | | | | | | | • | • | • | • | • | | • | • | • | • | • | • | |
| 180,000 pF | 184 | J | K | M | | | | | | | • | • | • | | | | • | • | • | • | • | | |
| 220,000 pF | 224 | J | K | M | | | | | | | • | • | • | | | | • | • | • | • | • | | |
| 270,000 pF | 274 | J | K | M | | | | | | | | | | | | | • | • | • | • | • | | |
| 330,000 pF | 334 | J | K | M | | | | | | | | | | | | | • | • | • | • | • | | |
| 390,000 pF | 394 | J | K | M | | | | | | | | | | | | | • | • | • | • | • | | |
| 470,000 pF | 474 | J | K | M | | | | | | | | | | | | | • | • | • | • | • | | |
| 560,000 pF | 564 | J | K | M | | | | | | | | | | | | | • | • | • | • | • | | |
| 680,000 pF | 684 | J | K | M | | | | | | | | | | | | | • | • | • | • | • | | |
| 820,000 pF | 824 | J | K | M | | | | | | | | | | | | | • | • | • | | | | |
| 1,000,000 pF | 105 | J | K | M | | | | | | | | | | | | | • | • | • | | | | |
| Capacitance | Cap Code | Rated Voltage | | | 4 | 6.3 | 10 | 16 | 25 | 50 | 4 | 6.3 | 10 | 16 | 25 | 50 | 4 | 6.3 | 10 | 16 | 25 | 50 | 100 |
| | | Voltage Code | | | 7 | 9 | 8 | 4 | 3 | 5 | 7 | 9 | 8 | 4 | 3 | 5 | 7 | 9 | 8 | 4 | 3 | 5 | 1 |
| | | Case Size | | | 0402 | | | | | | 0603 | | | | | | 0805 | | | | | | |

[1] *Only available with flexible termination.*

## Table 1B – Capacitance Range/Selection Waterfall (1206 – 1210 Case Sizes)

| Capacitance | Cap Code | Case Size | | | 1206 | | | | | | | 1210 | | | | | | |
|---|---|---|---|---|---|---|---|---|---|---|---|---|---|---|---|---|---|---|
| | | Voltage Code (MIL) | | | V | W | X | Y | Z | A | B | V | W | X | Y | Z | A | B |
| | | Voltage Code (KEMET) | | | 7 | 9 | 8 | 4 | 3 | 5 | 1 | 7 | 9 | 8 | 4 | 3 | 5 | 1 |
| | | Rated Voltage (VDC) | | | 4 | 6.3 | 10 | 16 | 25 | 50 | 100 | 4 | 6.3 | 10 | 16 | 25 | 50 | 100 |
| | | Capacitance Tolerance | | | Product Availability | | | | | | | | | | | | | |
| 82,000 pF | 823 | J | K | M | | | | | | | | • | • | • | • | • | • | •[1] |
| 100,000 pF | 104 | J | K | M | • | • | • | • | • | • | •[1] | • | • | • | • | • | • | •[1] |
| 120,000 pF | 124 | J | K | M | | | | | | | | • | • | • | • | • | • | •[1] |
| 150,000 pF | 154 | J | K | M | • | • | • | • | • | • | •[1] | • | • | • | • | • | • | •[1] |
| 180,000 pF | 184 | J | K | M | • | • | • | • | • | • | | • | • | • | • | • | • | •[1] |
| 220,000 pF | 224 | J | K | M | • | • | • | • | • | • | | • | • | • | • | • | • | •[1] |
| 270,000 pF | 274 | J | K | M | • | • | • | • | • | • | | • | • | • | • | • | • | •[1] |
| 330,000 pF | 334 | J | K | M | • | • | • | • | • | • | | • | • | • | • | • | • | •[1] |
| 390,000 pF | 394 | J | K | M | • | • | • | • | • | | | • | • | • | • | • | • | |
| 470,000 pF | 474 | J | K | M | • | • | • | • | • | | | • | • | • | • | • | • | |
| 560,000 pF | 564 | J | K | M | • | • | • | • | • | | | • | • | • | • | • | • | |
| 680,000 pF | 684 | J | K | M | • | • | • | • | • | | | • | • | • | • | • | • | |
| 820,000 pF | 824 | J | K | M | • | • | • | • | • | | | • | • | • | • | • | | |
| 1,000,000 pF | 105 | J | K | M | • | • | • | • | • | | | • | • | • | • | • | | |
| 1,200,000 pF | 125 | J | K | M | • | • | • | • | • | | | • | • | • | • | • | | |
| 1,500,000 pF | 155 | J | K | M | • | • | • | • | • | | | • | • | • | • | • | | |
| 1,800,000 pF | 185 | J | K | M | • | • | • | | | | | • | • | • | • | • | | |
| 2,200,000 pF | 225 | J | K | M | • | • | • | | | | | • | • | • | • | • | | |
| 2,700,000 pF | 275 | J | K | M | | | | | | | | | | | | | | |
| 3,300,000 pF | 335 | J | K | M | | | | | | | | • | • | • | | | | |
| Capacitance | Cap Code | Rated Voltage | | | 4 | 6.3 | 10 | 16 | 25 | 50 | 100 | 4 | 6.3 | 10 | 16 | 25 | 50 | 100 |
| | | Voltage Code | | | 7 | 9 | 8 | 4 | 3 | 5 | 1 | 7 | 9 | 8 | 4 | 3 | 5 | 1 |
| | | Case Size | | | 1206 | | | | | | | 1210 | | | | | | |

[1] *Only available with flexible termination.*

## Table 1C – Capacitance Range/Selection Waterfall (1812 – 2220 Case Sizes)

| Capacitance | Cap Code | Case Size | | | 1812 | | | | | | | 2220 | | | | | |
|---|---|---|---|---|---|---|---|---|---|---|---|---|---|---|---|---|---|
| | | Voltage Code (MIL) | | | V | W | X | Y | Z | A | B | V | W | X | Y | Z | A |
| | | Voltage Code (KEMET) | | | 7 | 9 | 8 | 4 | 3 | 5 | 1 | 7 | 9 | 8 | 4 | 3 | 5 |
| | | Rated Voltage (VDC) | | | 4 | 6.3 | 10 | 16 | 25 | 50 | 100 | 4 | 6.3 | 10 | 16 | 25 | 50 |
| | | Capacitance Tolerance | | | Product Availability | | | | | | | | | | | | |
| 100,000 pF | 104 | J | K | M | •[1] | •[1] | •[1] | •[1] | •[1] | •[1] | •[1] | • | • | • | • | • | •[1] |
| 120,000 pF | 124 | J | K | M | | | | | | | | | | | | | |
| 150,000 pF | 154 | J | K | M | •[1] | •[1] | •[1] | •[1] | •[1] | •[1] | •[1] | • | • | • | • | • | •[1] |
| 180000 pF | 184 | J | K | M | •[1] | •[1] | •[1] | •[1] | •[1] | •[1] | •[1] | • | • | • | • | • | •[1] |
| 220,000 pF | 224 | J | K | M | •[1] | •[1] | •[1] | •[1] | •[1] | •[1] | •[1] | • | • | • | • | • | •[1] |
| 270,000 pF | 274 | J | K | M | •[1] | •[1] | •[1] | •[1] | •[1] | •[1] | •[1] | • | • | • | • | • | •[1] |
| 330,000 pF | 334 | J | K | M | •[1] | •[1] | •[1] | •[1] | •[1] | •[1] | •[1] | • | • | • | • | • | •[1] |
| 390,000 pF | 394 | J | K | M | •[1] | •[1] | •[1] | •[1] | •[1] | •[1] | •[1] | • | • | • | • | • | •[1] |
| 470,000 pF | 474 | J | K | M | •[1] | •[1] | •[1] | •[1] | •[1] | •[1] | •[1] | • | • | • | • | • | •[1] |
| 560,000 pF | 564 | J | K | M | •[1] | •[1] | •[1] | •[1] | •[1] | •[1] | •[1] | • | • | • | • | • | •[1] |
| 680,000 pF | 684 | J | K | M | •[1] | •[1] | •[1] | •[1] | •[1] | •[1] | •[1] | • | • | • | • | • | •[1] |
| 820,000 pF | 824 | J | K | M | •[1] | •[1] | •[1] | •[1] | •[1] | •[1] | •[1] | • | • | • | • | • | •[1] |
| 1,000,000 pF | 105 | J | K | M | •[1] | •[1] | •[1] | •[1] | •[1] | •[1] | •[1] | • | • | • | • | • | •[1] |
| 1,200,000 pF | 125 | J | K | M | •[1] | •[1] | •[1] | •[1] | •[1] | •[1] | | • | • | • | • | • | •[1] |
| 1,500,000 pF | 155 | J | K | M | •[1] | •[1] | •[1] | •[1] | •[1] | •[1] | | • | • | • | • | • | •[1] |
| 1,800,000 pF | 185 | J | K | M | •[1] | •[1] | •[1] | •[1] | •[1] | •[1] | | • | • | • | • | • | |
| 2,200,000 pF | 225 | J | K | M | •[1] | •[1] | •[1] | •[1] | •[1] | | | • | • | • | • | • | |
| 2,700,000 pF | 275 | J | K | M | •[1] | •[1] | •[1] | •[1] | •[1] | | | • | • | • | • | • | |
| 3,300,000 pF | 335 | J | K | M | •[1] | •[1] | •[1] | •[1] | •[1] | | | • | • | • | • | • | |
| 3,900,000 pF | 395 | J | K | M | •[1] | •[1] | •[1] | •[1] | •[1] | | | • | • | • | • | | |
| 4,700,000 pF | 475 | J | K | M | •[1] | •[1] | •[1] | | | | | • | • | • | • | | |
| 5,600,000 pF | 565 | J | K | M | | | | | | | | • | • | | | | |
| 6,800,000 pF | 685 | J | K | M | | | | | | | | • | • | | | | |
| 8,200,000 pF | 825 | J | K | M | | | | | | | | • | • | | | | |
| 10,000,000 pF | 106 | J | K | M | | | | | | | | • | • | | | | |
| Capacitance | Cap Code | Rated Voltage | | | 4 | 6.3 | 10 | 16 | 25 | 50 | 100 | 4 | 6.3 | 10 | 16 | 25 | 50 |
| | | Voltage Code | | | 7 | 9 | 8 | 4 | 3 | 5 | 1 | 7 | 9 | 8 | 4 | 3 | 5 |
| | | Case Size | | | 1812 | | | | | | | 2220 | | | | | |

[1] *Only available with flexible termination.*

## Table 2 – Chip Capacitor Land Pattern Design Recommendations per IPC–7351

| EIA Size Code | Metric Size Code | Density Level A: Maximum (Most) Land Protrusion (mm) | | | | | Density Level B: Median (Nominal) Land Protrusion (mm) | | | | | Density Level C: Minimum (Least) Land Protrusion (mm) | | | | |
|---|---|---|---|---|---|---|---|---|---|---|---|---|---|---|---|---|
| | | C | Y | X | V1 | V2 | C | Y | X | V1 | V2 | C | Y | X | V1 | V2 |
| 0402 | 1005 | 0.50 | 0.72 | 0.72 | 2.20 | 1.20 | 0.45 | 0.62 | 0.62 | 1.90 | 1.00 | 0.40 | 0.52 | 0.52 | 1.60 | 0.80 |
| 0603 | 1608 | 0.90 | 1.15 | 1.10 | 4.00 | 2.10 | 0.80 | 0.95 | 1.00 | 3.10 | 1.50 | 0.60 | 0.75 | 0.90 | 2.40 | 1.20 |
| 0805 | 2012 | 1.00 | 1.35 | 1.55 | 4.40 | 2.60 | 0.90 | 1.15 | 1.45 | 3.50 | 2.00 | 0.75 | 0.95 | 1.35 | 2.80 | 1.70 |
| 1206 | 3216 | 1.60 | 1.35 | 1.90 | 5.60 | 2.90 | 1.50 | 1.15 | 1.80 | 4.70 | 2.30 | 1.40 | 0.95 | 1.70 | 4.00 | 2.00 |
| 1210 | 3225 | 1.60 | 1.35 | 2.80 | 5.65 | 3.80 | 1.50 | 1.15 | 2.70 | 4.70 | 3.20 | 1.40 | 0.95 | 2.60 | 4.00 | 2.90 |
| 1812 | 4532 | 2.15 | 1.60 | 3.60 | 6.90 | 4.60 | 2.05 | 1.40 | 3.50 | 6.00 | 4.00 | 1.95 | 1.20 | 3.40 | 5.30 | 3.70 |
| 2220 | 5650 | 2.75 | 1.70 | 5.50 | 8.20 | 6.50 | 2.65 | 1.50 | 5.40 | 7.30 | 5.90 | 2.55 | 1.30 | 5.30 | 6.60 | 5.60 |

***Density Level A:*** *For low-density product applications. It is recommended for wave solder applications and provides a wider process window for reflow solder processes. KEMET only recommends wave soldering of EIA 0603, 0805 and 1206 case sizes.*
***Density Level B:*** *For products with a moderate level of component density. It provides a robust solder attachment condition for reflow solder processes.*
***Density Level C:*** *For high component density product applications. Before adapting the minimum land pattern variations, the user should perform qualification testing based on the conditions outlined in IPC Standard 7351 (IPC-7351).*

*Image below based on Density Level B for an EIA 1210 case size.*

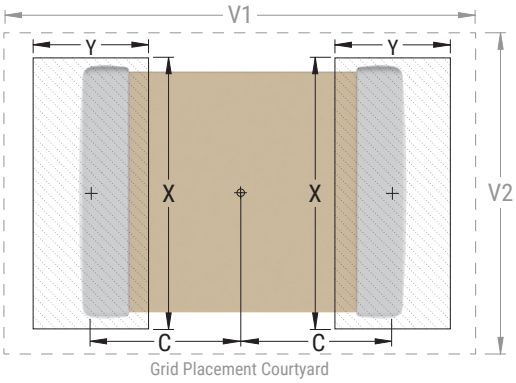

## Soldering Process

**Recommended Soldering Technique:**

- Solder wave or solder reflow for EIA case sizes 0603, 0805 and 1206
- All other EIA case sizes are limited to solder reflow only

**Recommended Reflow Soldering Profile:**

KEMET's families of Surface Mount Multilayer Ceramic Capacitors (SMD MLCCs) are compatible with wave (single or dual), convection, IR, or vapor phase reflow techniques. Preheating of these components is recommended to avoid extreme thermal stress. KEMET's recommended profile conditions for convection and IR reflow reflect the profile conditions of the IPC/J–STD–020 standard for moisture sensitivity testing. These devices can safely withstand a maximum of three reflow passes at these conditions.

| Profile Feature | Termination Finish |
|---|---|
| | SnPb |
| **Preheat/Soak**<br>Temperature minimum ($T_{Smin}$)<br>Temperature maximum ($T_{Smax}$)<br>Time ($t_s$) from $T_{Smin}$ to $T_{Smax}$ | <br>100°C<br>150°C<br>60 – 120 seconds |
| Ramp-up rate ($T_L$ to $T_P$) | 3°C/second maximum |
| Liquidous temperature ($T_L$) | 183°C |
| Time above liquidous ($t_L$) | 60 – 150 seconds |
| Peak temperature ($T_P$) | 235°C |
| Time within 5°C of maximum peak temperature ($t_P$) | 20 seconds maximum |
| Ramp-down rate ($T_P$ to $T_L$) | 6°C/second maximum |
| Time 25°C to peak temperature | 6 minutes maximum |

*Note: All temperatures refer to the center of the package, measured on the capacitor body surface that is facing up during assembly reflow.*

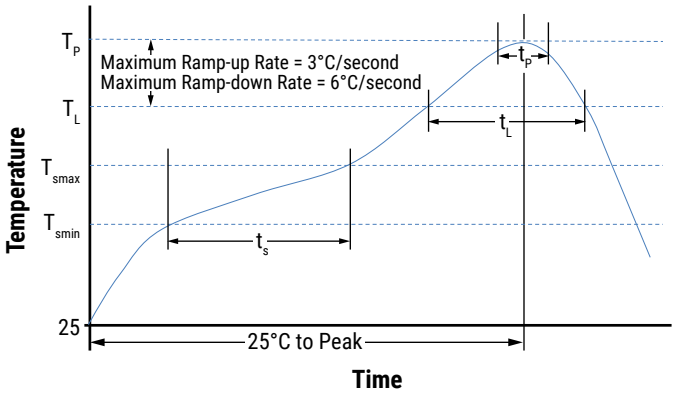


## Storage and Handling

Ceramic chip capacitors should be stored in normal working environments. While the chips themselves are quite robust in other environments, solderability will be degraded by exposure to high temperatures, high humidity, corrosive atmospheres, and long term storage. In addition, packaging materials will be degraded by high temperature – reels may soften or warp and tape peel force may increase. KEMET recommends that maximum storage temperature not exceed 40°C and maximum storage humidity not exceed 70% relative humidity. In addition, temperature fluctuations should be minimized to avoid condensation on the parts. The atmospheres should be free of chlorine and sulfur bearing compounds. For optimized solderability chip stock should be used promptly, preferably within 1.5 years upon receipt.

## Construction

### Standard Termination

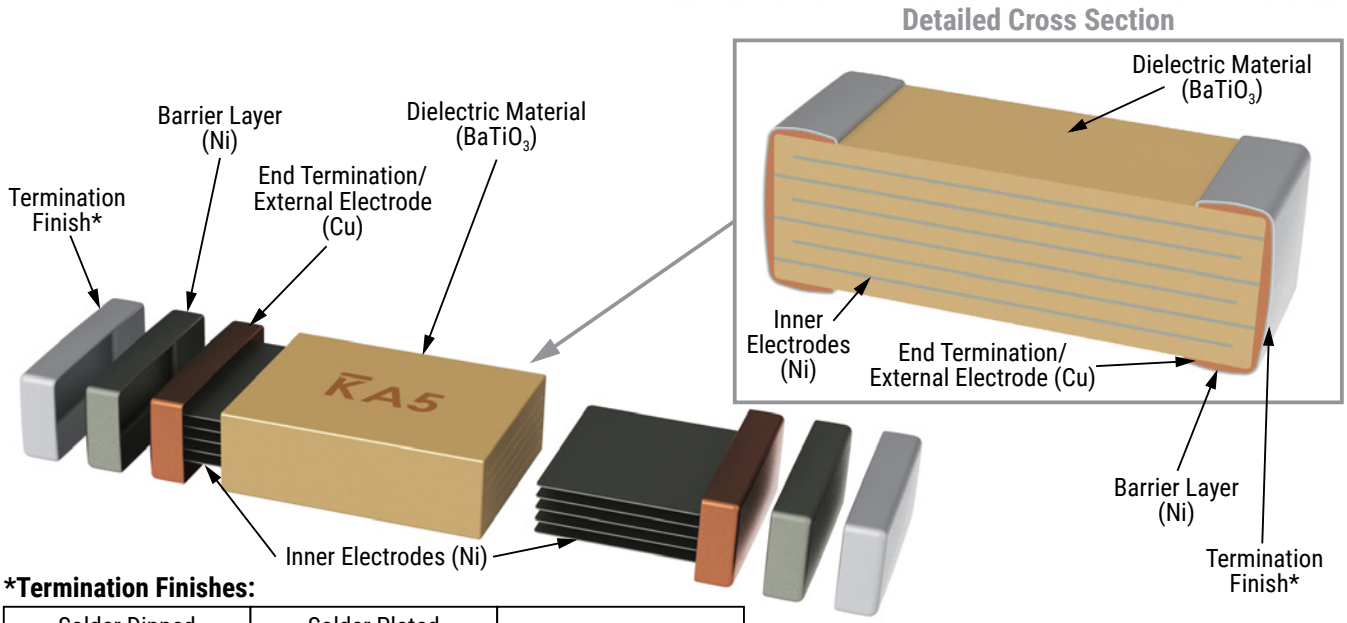


***Termination Finishes:**

| | | |
|---|---|---|
| Solder Dipped SnPb - 3% Pb Minimum | Solder Plated SnPb - 3% Pb Minimum | Gold (Au) |

### Flexible Termination

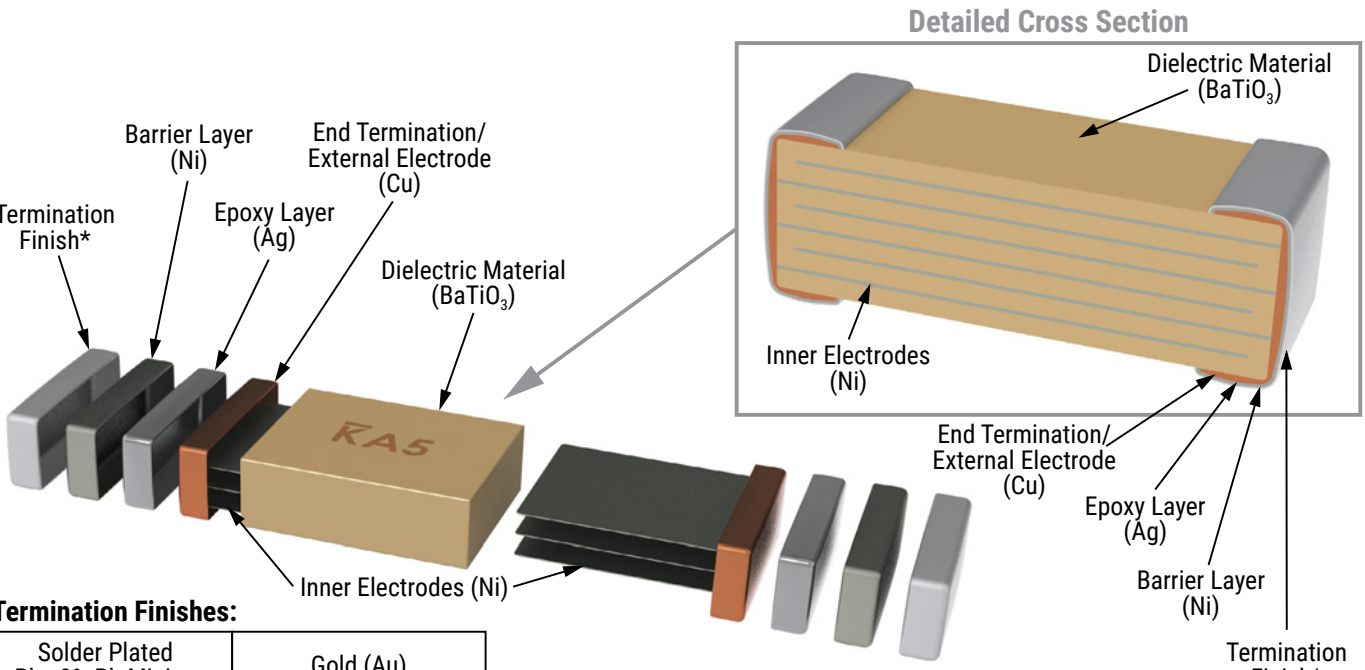


***Termination Finishes:**

| | |
|---|---|
| Solder Plated SnPb - 3% Pb Minimum | Gold (Au) |

## Capacitor Marking:

KEMET MIL-PRF-32535 ceramic capacitors will be marked in accordance with the military specification on case sizes ≥ 0805. Case sizes below 0805 will not be marked. Two sides of the ceramic body will be laser marked with a "K̄" to identify KEMET, followed by two characters to identify the capacitance value.

The marking appears in legible contrast. Illustrated below is an example of an MLCC with laser the marking of "K̄A5", which designates a KEMET device with the rated capacitance of 100 nF.

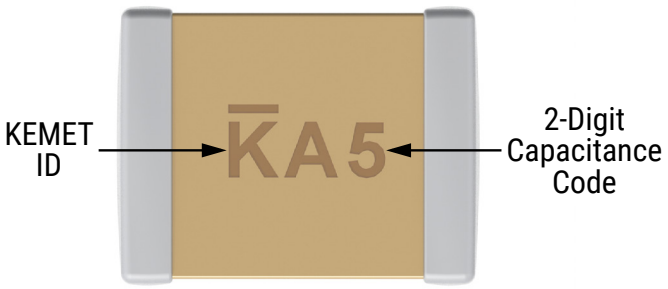


| Capacitance (pF) For Various Alpha/Numeral Identifiers | | | | | | | | | | |
|---|---|---|---|---|---|---|---|---|---|---|
| Alpha Character | Numeral | | | | | | | | | |
| | 9 | 0 | 1 | 2 | 3 | 4 | 5 | 6 | 7 | 8 |
| | Capacitance (pF) | | | | | | | | | |
| A | 0.1 | 1.0 | 10 | 100 | 1,000 | 10,000 | 100,000 | 1,000,000 | 10,000,000 | 100,000,000 |
| B | 0.11 | 1.1 | 11 | 110 | 1,100 | 11,000 | 110,000 | 1,100,000 | 11,000,000 | 110,000,000 |
| C | 0.12 | 1.2 | 12 | 120 | 1,200 | 12,000 | 120,000 | 1,200,000 | 12,000,000 | 120,000,000 |
| D | 0.13 | 1.3 | 13 | 130 | 1,300 | 13,000 | 130,000 | 1,300,000 | 13,000,000 | 130,000,000 |
| E | 0.15 | 1.5 | 15 | 150 | 1,500 | 15,000 | 150,000 | 1,500,000 | 15,000,000 | 150,000,000 |
| F | 0.16 | 1.6 | 16 | 160 | 1,600 | 16,000 | 160,000 | 1,600,000 | 16,000,000 | 160,000,000 |
| G | 0.18 | 1.8 | 18 | 180 | 1,800 | 18,000 | 180,000 | 1,800,000 | 18,000,000 | 180,000,000 |
| H | 0.2 | 2.0 | 20 | 200 | 2,000 | 20,000 | 200,000 | 2,000,000 | 20,000,000 | 200,000,000 |
| J | 0.22 | 2.2 | 22 | 220 | 2,200 | 22,000 | 220,000 | 2,200,000 | 22,000,000 | 220,000,000 |
| K | 0.24 | 2.4 | 24 | 240 | 2,400 | 24,000 | 240,000 | 2,400,000 | 24,000,000 | 240,000,000 |
| L | 0.27 | 2.7 | 27 | 270 | 2,700 | 27,000 | 270,000 | 2,700,000 | 27,000,000 | 270,000,000 |
| M | 0.3 | 3.0 | 30 | 300 | 3,000 | 30,000 | 300,000 | 3,000,000 | 30,000,000 | 300,000,000 |
| N | 0.33 | 3.3 | 33 | 330 | 3,300 | 33,000 | 330,000 | 3,300,000 | 33,000,000 | 330,000,000 |
| P | 0.36 | 3.6 | 36 | 360 | 3,600 | 36,000 | 360,000 | 3,600,000 | 36,000,000 | 360,000,000 |
| Q | 0.39 | 3.9 | 39 | 390 | 3,900 | 39,000 | 390,000 | 3,900,000 | 39,000,000 | 390,000,000 |
| R | 0.43 | 4.3 | 43 | 430 | 4,300 | 43,000 | 430,000 | 4,300,000 | 43,000,000 | 430,000,000 |
| S | 0.47 | 4.7 | 47 | 470 | 4,700 | 47,000 | 470,000 | 4,700,000 | 47,000,000 | 470,000,000 |
| T | 0.51 | 5.1 | 51 | 510 | 5,100 | 51,000 | 510,000 | 5,100,000 | 51,000,000 | 510,000,000 |
| U | 0.56 | 5.6 | 56 | 560 | 5,600 | 56,000 | 560,000 | 5,600,000 | 56,000,000 | 560,000,000 |
| V | 0.62 | 6.2 | 62 | 620 | 6,200 | 62,000 | 620,000 | 6,200,000 | 62,000,000 | 620,000,000 |
| W | 0.68 | 6.8 | 68 | 680 | 6,800 | 68,000 | 680,000 | 6,800,000 | 68,000,000 | 680,000,000 |
| X | 0.75 | 7.5 | 75 | 750 | 7,500 | 75,000 | 750,000 | 7,500,000 | 75,000,000 | 750,000,000 |
| Y | 0.82 | 8.2 | 82 | 820 | 8,200 | 82,000 | 820,000 | 8,200,000 | 82,000,000 | 820,000,000 |
| Z | 0.91 | 9.1 | 91 | 910 | 9,100 | 91,000 | 910,000 | 9,100,000 | 91,000,000 | 910,000,000 |
| a | 0.25 | 2.5 | 25 | 250 | 2,500 | 25,000 | 250,000 | 2,500,000 | 25,000,000 | 250,000,000 |
| b | 0.35 | 3.5 | 35 | 350 | 3,500 | 35,000 | 350,000 | 3,500,000 | 35,000,000 | 350,000,000 |
| d | 0.4 | 4.0 | 40 | 400 | 4,000 | 40,000 | 400,000 | 4,000,000 | 40,000,000 | 400,000,000 |
| e | 0.45 | 4.5 | 45 | 450 | 4,500 | 45,000 | 450,000 | 4,500,000 | 45,000,000 | 450,000,000 |
| f | 0.5 | 5.0 | 50 | 500 | 5,000 | 50,000 | 500,000 | 5,000,000 | 50,000,000 | 500,000,000 |
| m | 0.6 | 6.0 | 60 | 600 | 6,000 | 60,000 | 600,000 | 6,000,000 | 60,000,000 | 600,000,000 |
| n | 0.7 | 7.0 | 70 | 700 | 7,000 | 70,000 | 700,000 | 7,000,000 | 70,000,000 | 700,000,000 |
| t | 0.8 | 8.0 | 80 | 800 | 8,000 | 80,000 | 800,000 | 8,000,000 | 80,000,000 | 800,000,000 |
| y | 0.9 | 9.0 | 90 | 900 | 9,000 | 90,000 | 900,000 | 9,000,000 | 90,000,000 | 900,000,000 |

## Tape & Reel Packaging Information

KEMET offers multilayer ceramic chip capacitors packaged in 8 and 12 mm tape on 7" reels in accordance with EIA Standard 481. This packaging system is compatible with all tape-fed automatic pick and place systems.

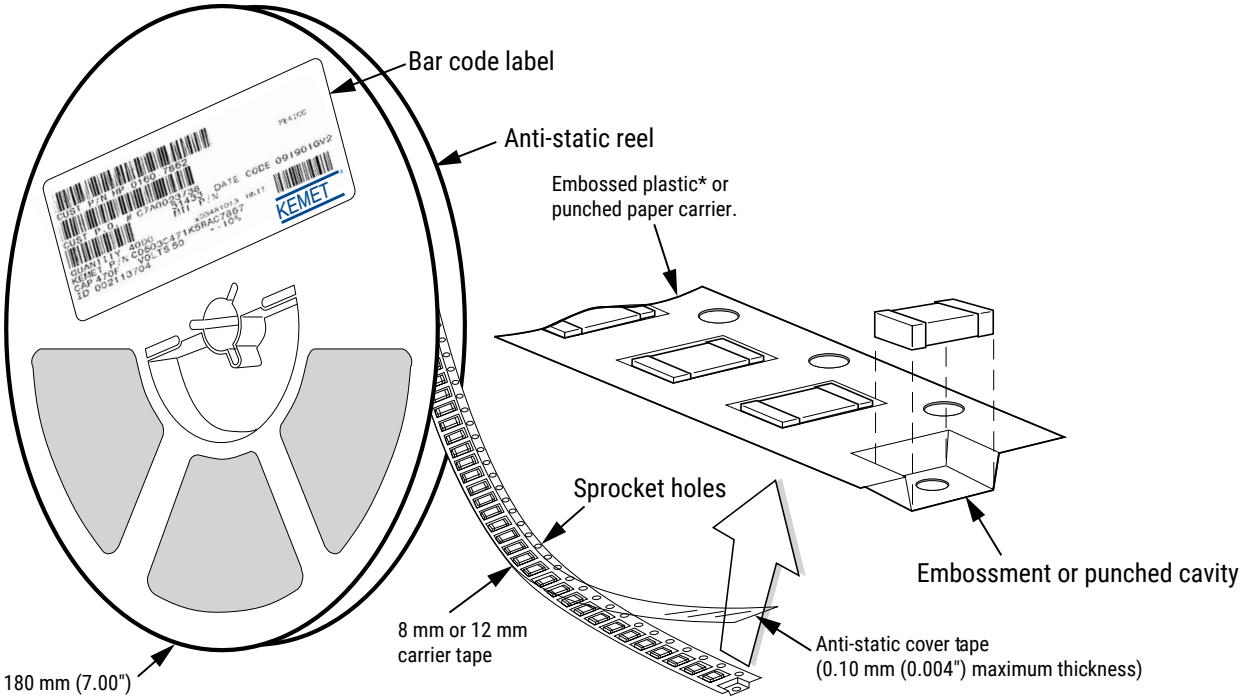


*EIA 0402 and 0603 case sizes available on punched paper carrier only.

## Table 3 – Carrier Tape Configuration, Embossed Plastic & Punched Paper (mm)

| EIA Case Size | Tape size (W)* | Embossed Plastic | Punched Paper |
|---|---|---|---|
| | | 7" Reel | 7" Reel |
| | | Pitch (P1)* | Pitch (P1)* |
| 0402 | 8 | | 2 |
| 0603 | 8 | | 4 |
| 0805 | 8 | 4 | 4 |
| 1206 – 1210 | 8 | 4 | 4 |
| ≥ 1812 | 12 | 8 | |

**Refer to Figures 1 and 2 for W and $P_1$ carrier tape reference locations.*
**Refer to Tables 6 and 7 for tolerance specifications.*

## Figure 1 – Embossed (Plastic) Carrier Tape Dimensions

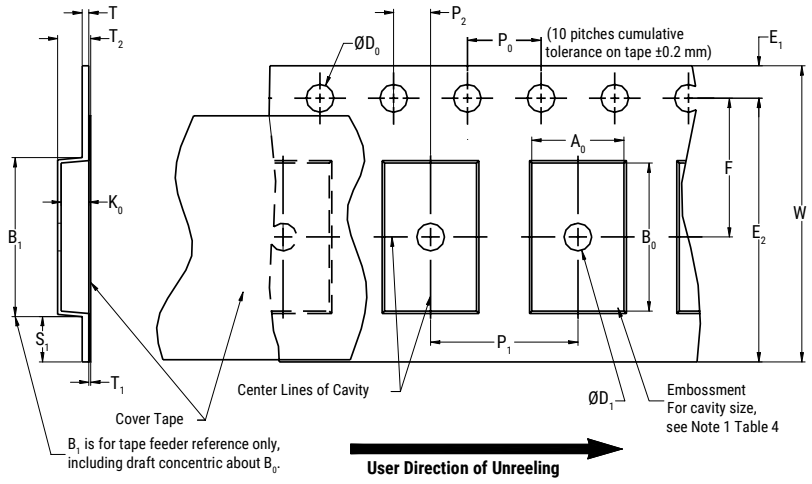


## Table 4 – Embossed (Plastic) Carrier Tape Dimensions

Metric will govern

| Constant Dimensions — Millimeters (Inches) | | | | | | | | | |
|---|---|---|---|---|---|---|---|---|---|
| Tape Size | $D_0$ | $D_1$ Minimum Note 1 | $E_1$ | $P_0$ | $P_2$ | R Reference Note 2 | $S_1$ Minimum Note 3 | T Maximum | $T_1$ Maximum |
| 8 mm | 1.5 +0.10/−0.0 (0.059 +0.004/−0.0) | 1.0 (0.039) | 1.75±0.10 (0.069±0.004) | 4.0±0.10 (0.157±0.004) | 2.0±0.05 (0.079±0.002) | 25.0 (0.984) | 0.600 (0.024) | 0.600 (0.024) | 0.100 (0.004) |
| 12 mm | | 1.5 (0.059) | | | | 30 (1.181) | | | |

| Variable Dimensions — Millimeters (Inches) | | | | | | | | |
|---|---|---|---|---|---|---|---|---|
| Tape Size | Pitch | $B_1$ Maximum Note 4 | $E_2$ Minimum | F | $P_1$ | $T_2$ Maximum | W Maximum | $A_0$,$B_0$ and $K_0$ |
| 8 mm | Single (4 mm) | 4.35 (0.171) | 6.25 (0.246) | 3.5±0.05 (0.138±0.002) | 4.0±0.10 (0.157±0.004) | 2.5 (0.098) | 8.3 (0.327) | Note 5 |
| 12 mm | Single (4 mm) and Double (8 mm) | 8.2 (0.323) | 10.25 (0.404) | 5.5±0.05 (0.217±0.002) | 8.0±0.10 (0.315±0.004) | 4.6 (0.181) | 12.3 (0.484) | |

*1. The embossment hole location shall be measured from the sprocket hole controlling the location of the embossment. Dimensions of the embossment location and the hole location shall be applied independent of each other.*
*2. The tape with or without components, shall pass around R without damage (see Figure 6).*
*3. If S1 < 1.0 mm, there may not be enough area for cover tape to be properly applied (see EIA Document 481 paragraph 4.3 (b)).*
*4. B1 dimension is a reference dimension for a tape feeder clearance only.*
*5. The cavity defined by $A_0$, $B_0$ and $K_0$ shall surround the component with sufficient clearance that:*
*(a) The component does not protrude above the top surface of the carrier tape.*
*(b) The component can be removed from the cavity in a vertical direction without mechanical restriction, after the top cover tape has been removed.*
*(c) Rotation of the component is limited to 20° maximum for 8 and 12 mm tapes; 10° maximum for 16 mm tapes (see Figure 3).*
*(d) Lateral movement of the component is restricted to 0.5 mm maximum for 8 mm and 12 mm wide tape; to 1.0 mm maximum for 16 mm tape (see Figure 4).*
*(e) See addendum in EIA Document 481 for standards relating to more precise taping requirements.*

## Figure 2 – Punched (Paper) Carrier Tape Dimensions

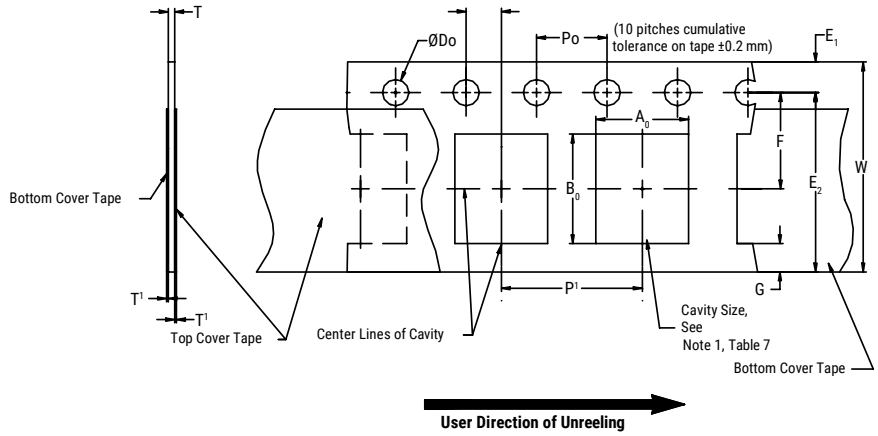


## Table 5 – Punched (Paper) Carrier Tape Dimensions

Metric will govern

| Constant Dimensions — Millimeters (Inches) | | | | | | | |
|---|---|---|---|---|---|---|---|
| Tape Size | $D_0$ | $E_1$ | $P_0$ | $P_2$ | $T_1$ Maximum | G Minimum | R Reference Note 2 |
| 8 mm | 1.5 + 0.10/−0.0 (0.059 + 0.004/−0.0) | 1.75±0.10 (0.069±0.004) | 4.0±0.10 (0.157±0.004) | 2.0±0.05 (0.079±0.002) | 0.100 (0.004) | 0.75 (0.030) | 25.0 (0.984) |

| Variable Dimensions — Millimeters (Inches) | | | | | | | |
|---|---|---|---|---|---|---|---|
| Tape Size | Pitch | $E_2$ Minimum | F | P1 | T Maximum | W Maximum | $A_0$ and $B_0$ |
| 8 mm | Half (2 mm) | 6.25 (0.246) | 3.5±0.05 (0.138±0.002) | 2.0±0.05 (0.079±0.002) | 1.1 (0.098) | 8.3 (0.327) | Note 1 |
| 8 mm | Single (4 mm) | | | 4.0±0.10 (0.157±0.004) | | 8.3 (0.327) | |

*1. The cavity defined by $A_0$, $B_0$ and T shall surround the component with sufficient clearance that:*
*a) the component does not protrude beyond either surface of the carrier tape.*
*b) the component can be removed from the cavity in a vertical direction without mechanical restriction, after the top cover tape has been removed.*
*c) rotation of the component is limited to 20° maximum (see Figure 3).*
*d) lateral movement of the component is restricted to 0.5 mm maximum (see Figure 4).*
*e) see Addendum in EIA Standard 481 for standards relating to more precise taping requirements.*
*2. The tape with or without components shall pass around R without damage (see Figure 6).*

## Packaging Information Performance Notes

**1. Cover Tape Break Force:** 1.0 kg minimum.
**2. Cover Tape Peel Strength:** The total peel strength of the cover tape from the carrier tape shall be:

| Tape Width | Peel Strength |
|---|---|
| 8 mm | 0.1 to 1.0 Newton (10 to 100 gf) |
| 12 and 16 mm | 0.1 to 1.3 Newton (10 to 130 gf) |

The direction of the pull shall be opposite the direction of the carrier tape travel. The pull angle of the carrier tape shall be 165° to 180° from the plane of the carrier tape. During peeling, the carrier and/or cover tape shall be pulled at a velocity of 300 ±10 mm/minute.
**3. Labeling:** Bar code labeling (standard or custom) shall be on the side of the reel opposite the sprocket holes. *Refer to EIA Standards 556 and 624*.

## Figure 3 – Maximum Component Rotation

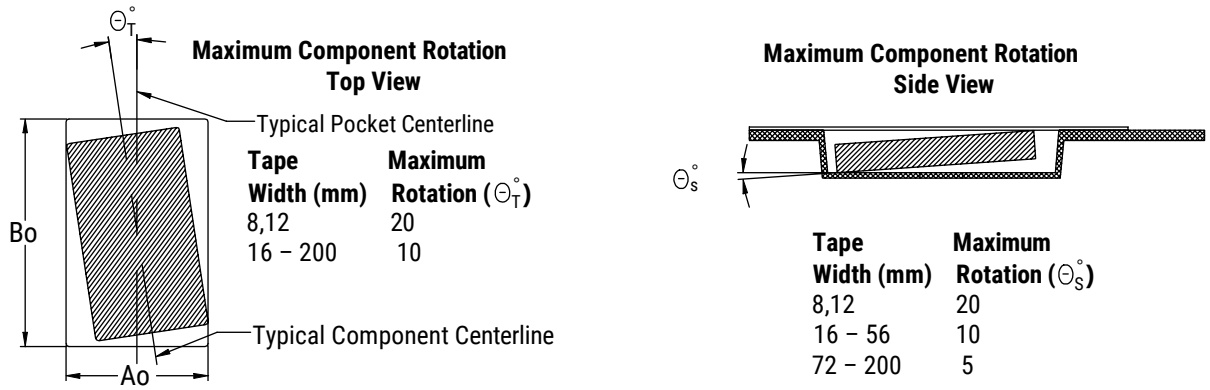


## Figure 4 – Maximum Lateral Movement

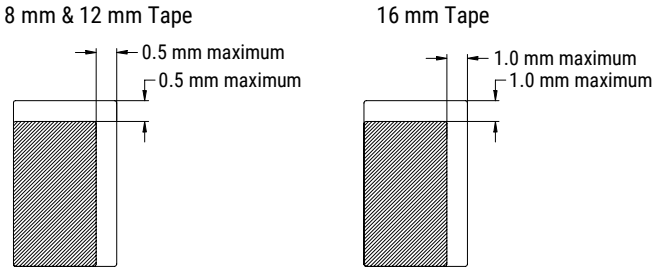


## Figure 5 – Bending Radius

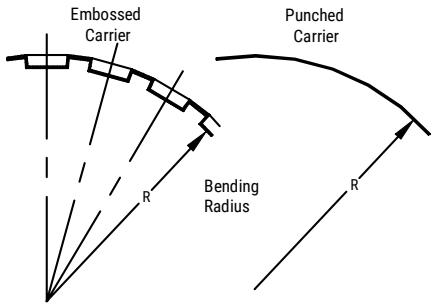

## Figure 6 – Reel Dimensions

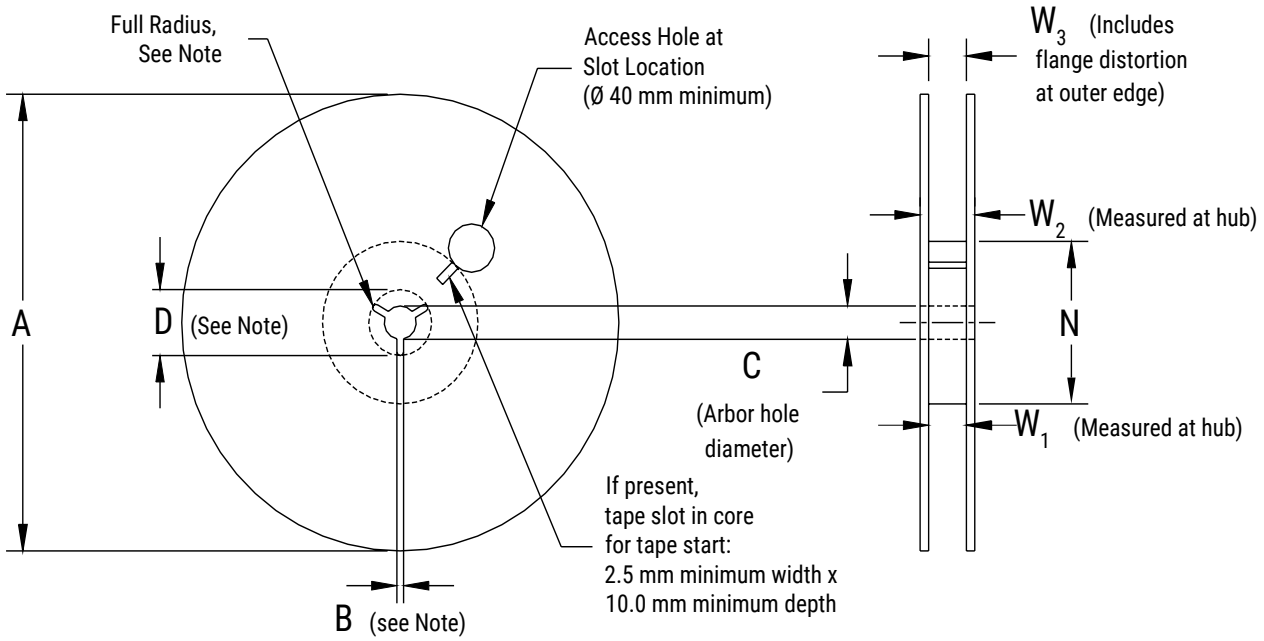


Note: Drive spokes optional; if used, dimensions B and D shall apply.

## Table 6 – Reel Dimensions

Metric will govern

| Constant Dimensions — Millimeters (Inches) | | | | |
|---|---|---|---|---|
| Tape Size | A | B Minimum | C | D Minimum |
| 8 mm | 178±0.20 (7.008±0.008) or 330±0.20 (13.000±0.008) | 1.5 (0.059) | 13.0 + 0.5/−0.2 (0.521 + 0.02/−0.008) | 20.2 (0.795) |
| 12 mm | | | | |

| Variable Dimensions — Millimeters (Inches) | | | | |
|---|---|---|---|---|
| Tape Size | N Minimum See Note 2, Tables 2–3 | $W_1$ | $W_2$ Maximum | $W_3$ |
| 8 mm | 50 (1.969) | 8.4 + 1.5/−0.0 (0.331 + 0.059/−0.0) | 14.4 (0.567) | Shall accomadate tape width without interference |
| 12 mm | | 12.4 + 2.0/−0.0 (0.488 + 0.078/−0.0) | 18.4 (0.724) | |

## Figure 7 – Tape Leader & Trailer Dimensions

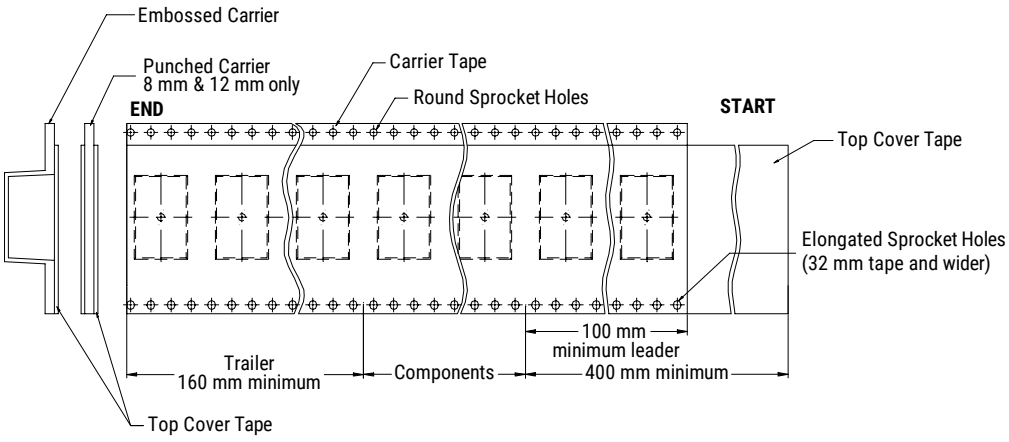


## Figure 8 – Maximum Camber

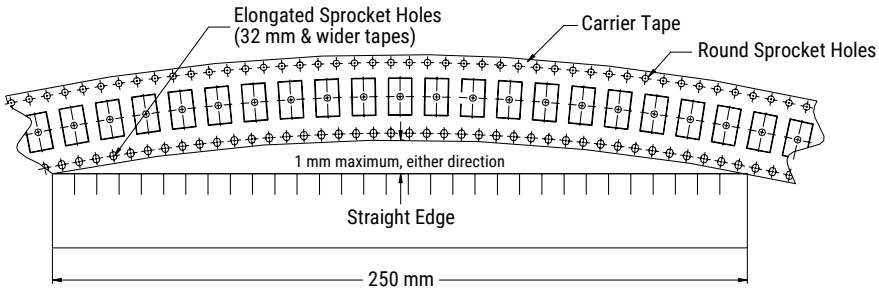

# Waffle Tray Packaging Information – 2" x 2" w/ Static Protection

## Figure 9 – Waffle Tray Dimensions – Inches (Millimeters)

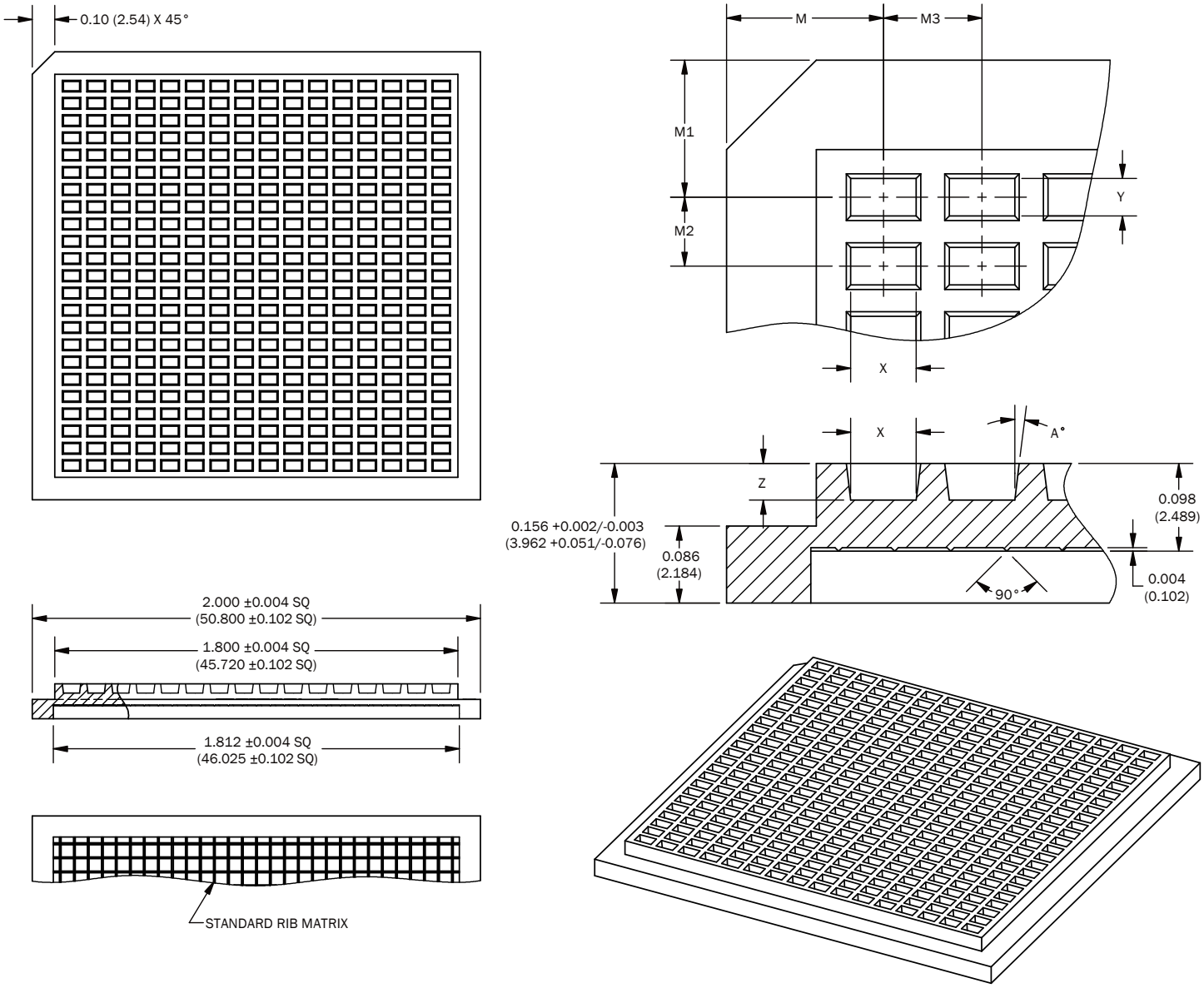

## Table 7A – Waffle Tray Dimensions – Inches

| Case Size | | 2" x 2" Waffle Tray Dimensions – Inches | | | | | | | | | Packaging Quantity (pcs/unit packaging) |
|---|---|---|---|---|---|---|---|---|---|---|---|
| | | M | M1 | M2 | M3 | X | Y | Z | A° | MATRIX | |
| EIA (in) | Metric (mm) | ±0.003 | ±0.003 | ±0.002 | ±0.002 | ±0.002 | ±0.002 | ±0.003 | ±1/2° | (X x Y) | |
| 0402 | 1005 | 0.175 | 0.153 | 0.077 | 0.110 | 0.073 | 0.042 | 0.041 | 7 | 16 X 23 | 368 |
| 0603 | 1608 | 0.175 | 0.153 | 0.077 | 0.110 | 0.073 | 0.042 | 0.041 | 7 | 16 X 23 | 368 |
| 0805 | 2012 | 0.232 | 0.186 | 0.181 | 0.171 | 0.062 | 0.092 | 0.036 | 10 | 10 X 10 | 100 |
| 1206[1,2] | 3216 | 0.194 | 0.228 | 0.193 | 0.124 | 0.067 | 0.130 | 0.065 | 5 | 14 X 9 | 126 |
| 1206[1,3] | 3216 | 0.250 | 0.250 | 0.375 | 0.167 | 0.100 | 0.200 | 0.070 | 5 | 10 X 5 | 50 |
| 1210 | 3225 | 0.217 | 0.244 | 0.215 | 0.174 | 0.110 | 0.145 | 0.080 | 5 | 10 X 8 | 80 |
| 1812 | 4532 | 0.271 | 0.285 | 0.286 | 0.243 | 0.150 | 0.200 | 0.075 | 5 | 7 X 6 | 42 |
| 2220 | 5650 | 0.318 | 0.362 | 0.424 | 0.34 | 0.24 | 0.32 | 0.032 | 5 | 5 X 4 | 20 |

*[1] Packaging of 1206 (3216 metric) case size capacitors is dependent upon the nominal chip thickness of the device. Contact KEMET Sales for Waffle Tray quantities for specified part number.*
*[2] Assigned to 1206 (3216 metric) case size capacitors with nominal thickness of ≤ 1.25 mm (0.049 inches).*
*[3] Assigned to 1206 (3216 metric) case size capacitors with nominal thickness of > 1.25 mm (0.049 inches).*

## Table 7B – Waffle Tray Dimensions – Millimeters

| Case Size | | 2" x 2" Waffle Tray Dimensions – Millimeters | | | | | | | | | Packaging Quantity (pcs/unit packaging) |
|---|---|---|---|---|---|---|---|---|---|---|---|
| | | M | M1 | M2 | M3 | X | Y | Z | A° | MATRIX | |
| EIA (in) | Metric (mm) | ±0.08 | ±0.08 | ±0.05 | ±0.05 | ±0.05 | ±0.05 | ±0.08 | ±1/2° | (X x Y) | |
| 0402 | 1005 | 4.45 | 3.89 | 1.96 | 2.79 | 1.85 | 1.07 | 1.04 | 7 | 16 X 23 | 368 |
| 0603 | 1608 | 4.45 | 3.89 | 1.96 | 2.79 | 1.85 | 1.07 | 1.04 | 7 | 16 X 23 | 368 |
| 0805 | 2012 | 5.89 | 4.72 | 4.60 | 4.34 | 1.57 | 2.34 | 0.91 | 10 | 10 X 10 | 100 |
| 1206[1,2] | 3216 | 4.93 | 5.79 | 4.90 | 3.15 | 1.70 | 3.30 | 1.65 | 5 | 14 X 9 | 126 |
| 1206[1,3] | 3216 | 6.35 | 6.35 | 9.53 | 4.24 | 2.54 | 5.08 | 1.78 | 5 | 10 X 5 | 50 |
| 1210 | 3225 | 5.51 | 6.20 | 5.46 | 4.42 | 2.79 | 3.68 | 2.03 | 5 | 10 X 8 | 80 |
| 1812 | 4532 | 6.88 | 7.24 | 7.26 | 6.17 | 3.81 | 5.08 | 1.91 | 5 | 7 X 6 | 42 |
| 2220 | 5650 | 8.08 | 9.19 | 10.77 | 8.64 | 6.10 | 8.13 | 0.81 | 5 | 5 X 4 | 20 |

*[1] Packaging of 1206 (3216 metric) case size capacitors is dependent upon the nominal chip thickness of the device. Contact KEMET Sales for Waffle Tray quantities for specified part number.*
*[2] Assigned to 1206 (3216 metric) case size capacitors with nominal thickness of ≤ 1.25 mm (0.049 inches).*
*[3] Assigned to 1206 (3216 metric) case size capacitors with nominal thickness of > 1.25 mm (0.049 inches).*

## KEMET Electronics Corporation Sales Offices

For a complete list of our global sales offices, please visit www.kemet.com/sales.

## Disclaimer

YAGEO Corporation and its affiliates do not recommend the use of commercial or automotive grade products for high reliability applications or manned space flight.

All product specifications, statements, information and data (collectively, the "Information") in this datasheet are subject to change. The customer is responsible for checking and verifying the extent to which the Information contained in this publication is applicable to an order at the time the order is placed. All Information given herein is believed to be accurate and reliable, but it is presented without guarantee, warranty, or responsibility of any kind, expressed or implied.

Statements of suitability for certain applications are based on KEMET Electronics Corporation's ("KEMET") knowledge of typical operating conditions for such applications, but are not intended to constitute – and KEMET specifically disclaims – any warranty concerning suitability for a specific customer application or use. The Information is intended for use only by customers who have the requisite experience and capability to determine the correct products for their application. Any technical advice inferred from this Information or otherwise provided by KEMET with reference to the use of KEMET's products is given gratis, and KEMET assumes no obligation or liability for the advice given or results obtained.

Although KEMET designs and manufactures its products to the most stringent quality and safety standards, given the current state of the art, isolated component failures may still occur. Accordingly, customer applications which require a high degree of reliability or safety should employ suitable designs or other safeguards (such as installation of protective circuitry or redundancies) in order to ensure that the failure of an electrical component does not result in a risk of personal injury or property damage.

Although all product–related warnings, cautions and notes must be observed, the customer should not assume that all safety measures are indicated or that other measures may not be required.

*KEMET is a registered trademark of KEMET Electronics Corporation.*