PHE426 Single Metallized Polypropylene Film

Overview

Polypropylene film capacitor with vacuum evaporated aluminum electrodes. Radial leads of tinned wire are electrically welded to the metal layer on the ends of the capacitor winding. The capacitor is encapsulated with a self-extinguishing thermosetting resin in a box material meeting the UL 94 V–0 requirements.

Two different winding constructions are used, depending on voltage and lead spacing. They are specified in the part number table.

Applications

Pulse operation in SMPS, TV, monitor, electrical ballast and other high frequency applications demanding stable operation.

ATTENTION -- This series was replaced by the R75 series. Please click on the link to the R75 series datasheet HERE.

Benefits

- Voltage range: 100 – 2000 VDC
- Capacitance range: 0.001 – 27 µF
- Lead Spacing: 5 – 37.5 mm
- Capacitance tolerance: ±5%, other tolerances upon request
- Climatic category: 55/105/56 IEC 60068–1
- Operating temperature range of −55°C to +105°C
- RoHS compliance and lead-free terminations
- Tape & Reel packaging in accordance with IEC 60286–2
- Self-healing

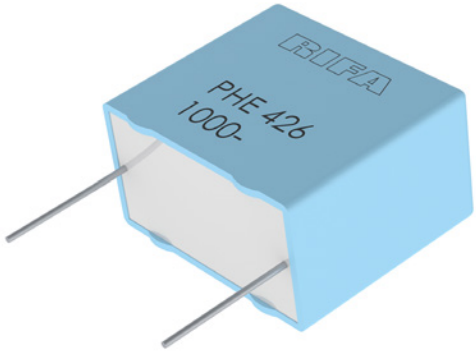

© KEMET Electronics Corporation • One East Broward Boulevard
Fort Lauderdale, FL 33301 USA • 954-766-2800 • www.kemet.com

Customer Part Number

PHE426	M	K	4330	J	R17T0
Series	Rated Voltage (VDC)	Lead Spacing (mm)	Capacitance Code (pF)	Capacitance Tolerance	Legacy Lead and Packaging Code
Metallized Polypropylene	D = 100 H = 250 J = 300 K = 400 L = 450 M = 630 P = 1,000 R = 1,600 S = 2,000	J = 5 K = 7.5 A = 10 B = 15 D = 22.5 F = 27.5 R = 37.5	The last three digits represent significant figures. The first digit specifies the total number of digits.	J = ±5%; Other tolerances on request	See Ordering Options Table

KEMET Internal Part Number

F	426	K	G	332	J	630	L
Capacitor Class	Series	Lead Spacing (mm)	Size Code	Capacitance Code (pF)	Capacitance Tolerance	Rated Voltage (VDC)	KEMET Lead and Packaging Code
F = Film	Metallized Polypropylene	J = 5 K = 7.5 A = 10 B = 15 D = 22.5 F = 27.5 R = 37.5	See Dimension Table	First two digits represent significant figures. Third digit specifies number of zeros.	J = ±5%, Other tolerances on request	100 = 100 250 = 250 300 = 300 400 = 400 450 = 450 630 = 630 1K0 = 1,000 1K6 = 1,600 2K0 = 2,000	See Ordering Options Table

Ordering Options Table

Lead Spacing Nominal (mm)	Type of Leads and Packaging	Lead Length (mm)	KEMET Lead and Packaging Code	Legacy Lead and Packaging Code
5	**Standard Lead and Packaging Options**			
	Bulk (Bag) – Short Leads	4 +2/−0	C	R05
	Bulk (Bag) – Long Leads	17 +0/−1	ALH0J	R17
	Tape & Reel (Standard Reel)	H_0= 18.5 ±0.5	L	R17T0
	Other Lead and Packaging Options			
	Bulk (Bag) – Maximum Length Leads	20 +5/−0	ALL0L	R20
	Ammo Pack	H_0= 18.5 ±0.5	R	R17TA
7.5	**Standard Lead and Packaging Options**			
	Bulk (Bag) – Short Leads	4 +2/−0	C	R05
	Bulk (Bag) – Long Leads	17 +0/−1	ALH0J	R17
	Tape & Reel (Standard Reel)	H_0= 18.5 ±0.5	L	R17T0
	Other Lead and Packaging Options			
	Bulk (Bag) – Maximum Length Leads	20 +5/−0	ALL0L	R20
	Ammo Pack	H_0= 18.5 ±0.5	R	R17TA
10	**Standard Lead and Packaging Options**			
	Bulk (Bag) – Short Leads	4 +2/−0	C	R05
	Bulk (Bag) – Long Leads	17 +0/−1	ALH0J	R17
	Tape & Reel (Standard Reel)	H_0= 18.5 ±0.5	L	R17T0
	Other Lead and Packaging Options			
	Bulk (Bag) – Maximum Length Leads	20 +5/−0	ALL0L	R20
	Tape & Reel (Large Reel)	H_0= 18.5 ±0.5	P	R17T1
15	**Standard Lead and Packaging Options**			
	Bulk (Bag) – Short Leads	4 +2/−0	C	R06
	Bulk (Bag) – Long Leads	17 +0/−1	ALH0J	R17
	Other Lead and Packaging Options			
	Tape & Reel (Standard Reel)	H_0= 18.5 ±0.5	L	R17T0
	Tape & Reel (Large Reel)	H_0= 18.5 ±0.5	P	R17T1
	Bulk (Bag) – Maximum Length Leads	25 +5/−0	ALR0L	R25L

Ordering Options Table cont.

Lead Spacing Nominal (mm)	Type of Leads and Packaging	Lead Length (mm)	KEMET Lead and Packaging Code	Legacy Lead and Packaging Code
22.5	**Standard Lead and Packaging Options**			
	Bulk (Tray) – Long Leads	17 +0/−1	ALH0J	R17L2
	Bulk (Tray) – Short Leads	4 +2/−0	C	R06L2
	Other Lead and Packaging Options			
	Pizza – Short Leads	3.2 +0.3/−0.2	CL32K	R032KL2
	Tape & Reel (Standard Reel)	H_0= 18.5 ±0.5	L	R17T0
	Tape & Reel (Large Reel)	H_0= 18.5 ±0.5	P	R17T1
27.5	**Standard Lead and Packaging Options**			
	Bulk (Tray) – Straight Leads	6 +0/−1	C	R06L2
	Other Lead and Packaging Options			
	Bulk (Tray) – Maximum Length Leads 30	+5/−0	ALW0L	R30L2
	Tape & Reel (Large Reel)	H_0 = 18.5 ±0.5	P	R17T1
37.5	**Standard Lead and Packaging Options**			
	Bulk (Tray) – Straight Leads	6 +0/−1	C	R06L2
	Other Lead and Packaging Options			
	Bulk (Tray) – Maximum Length Leads 30	+5/−0	ALW0L	R30L2

Dimensions – Millimeters

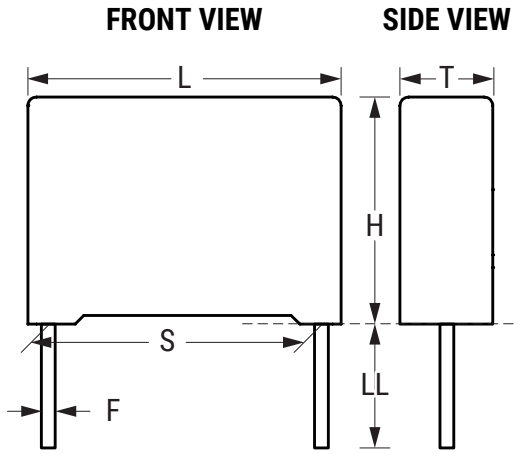

Size Code	S		T		H		L		F	
	Nominal	Tolerance	Nominal	Tolerance	Nominal	Tolerance	Nominal	Tolerance	Nominal	Tolerance
JF	5.0	±0.4	2.5	0/−0.5	6.5	0/−0.5	7.2	0/−0.5	0.5	±0.05
JG	5.0	±0.4	3.5	0/−0.5	7.5	0/−0.5	7.2	0/−0.5	0.5	±0.05
JM	5.0	±0.4	4.5	0/−0.5	9.5	0/−0.5	7.2	0/−0.5	0.5	±0.05
JQ	5.0	±0.4	5.0	0/−0.5	10.0	0/−0.5	7.2	0/−0.5	0.5	±0.05
JT	5.0	±0.4	6.0	0/−0.5	11.0	0/−0.5	7.2	0/−0.5	0.5	±0.05
JU	5.0	±0.4	7.2	0/−0.5	13.0	0/−0.5	7.2	0/−0.5	0.5	±0.05
KE	7.5	±0.4	2.5	0/−0.5	6.0	0/−0.5	10.0	0/−0.5	0.6	±0.05
KF	7.5	±0.4	3.0	0/−0.5	8.0	0/−0.5	10.0	0/−0.5	0.6	±0.05
KG	7.5	±0.4	4.0	0/−0.5	8.0	0/−0.5	10.0	0/−0.5	0.6	±0.05
KJ	7.5	±0.4	5.0	0/−0.5	10.5	0/−0.5	10.0	0/−0.5	0.6	±0.05
KM	7.5	±0.4	6.0	0/−0.5	12.0	0/−0.5	10.5	0/−0.5	0.6	±0.05
AG	10.0	±0.4	4.0	0/−0.5	9.0	0/−0.5	13.0	0/−0.5	0.6	±0.05
AK	10.0	±0.4	5.0	0/−0.5	11.0	0/−0.5	13.0	0/−0.5	0.6	±0.05
AP	10.0	±0.4	6.0	0/−0.5	12.0	0/−0.5	13.0	0/−0.5	0.6	±0.05
BB	15.0	±0.4	4.0	0/−0.5	10.0	0/−0.5	18.0	0/−0.5	0.8	±0.05
BC	15.0	±0.4	5.0	0/−0.5	11.0	0/−0.5	18.0	0/−0.5	0.8	±0.05
BE	15.0	±0.4	5.5	0/−0.5	12.5	0/−0.5	18.0	0/−0.5	0.8	±0.05
BG	15.0	±0.4	6.0	0/−0.5	12.0	0/−0.5	18.0	0/−0.5	0.8	±0.05
BK	15.0	±0.4	7.5	0/−0.5	13.5	0/−0.5	18.0	0/−0.5	0.8	±0.05
BI	15.0	±0.4	6.0	0/−0.5	17.5	0/−0.5	18.0	0/−0.5	0.8	±0.05
BP	15.0	±0.4	8.5	0/−0.5	14.5	0/−0.5	18.0	0/−0.5	0.8	±0.05
BS	15.0	±0.4	10.0	0/−0.5	16.0	0/−0.5	18.0	0/−0.5	0.8	±0.05
BY	15.0	±0.4	11.0	0/−0.5	19.0	0/−0.5	18.0	0/−0.5	0.8	±0.05
DB	22.5	±0.4	6.0	0/−0.5	14.5	0/−0.5	26.0	0/−0.5	0.8	±0.05
DI	22.5	±0.4	7.0	0/−0.5	16.0	0/−0.5	26.0	0/−0.5	0.8	±0.05
DH	22.5	±0.4	8.0	0/−0.5	16.0	0/−0.5	26.0	0/−0.5	0.8	±0.05
DJ	22.5	±0.4	8.5	0/−0.5	17.0	0/−0.5	26.0	0/−0.5	0.8	±0.05
DM	22.5	±0.4	9.0	0/−0.5	18.5	0/−0.5	26.0	0/−0.5	0.8	±0.05
DO	22.5	±0.4	10.0	0/−0.5	18.5	0/−0.5	26.0	0/−0.5	0.8	±0.05

Note: See Ordering Options Table for lead length (LL) options.

Dimensions – Millimeters cont.

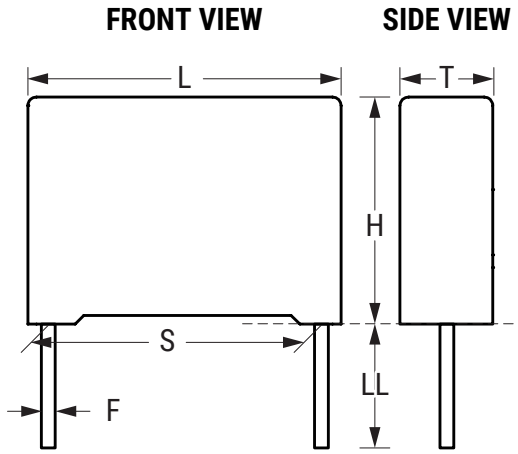

Size Code	S		T		H		L		F	
	Nominal	Tolerance	Nominal	Tolerance	Nominal	Tolerance	Nominal	Tolerance	Nominal	Tolerance
DP	22.5	±0.4	11.0	0/−0.5	20.0	0/−0.5	26.0	0/−0.5	0.8	±0.05
DU	22.5	±0.4	13.0	0/−0.5	22.0	0/−0.5	26.0	0/−0.5	0.8	±0.05
DY	22.5	±0.4	15.5	0/−0.5	24.5	0/−0.5	26.0	0/−0.5	0.8	±0.05
FB	27.5	±0.4	9.0	0/−0.7	17.0	0/−0.7	31.5	0/−0.7	0.8	±0.05
FC	27.5	±0.4	11.0	0/−0.7	20.0	0/−0.7	31.5	0/−0.7	0.8	±0.05
FI	27.5	±0.4	13.0	0/−0.7	25.0	0/−0.7	31.5	0/−0.7	0.8	±0.05
FN	27.5	±0.4	14.0	0/−0.7	28.0	0/−0.7	31.5	0/−0.7	0.8	±0.05
FR	27.5	±0.4	17.5	0/−0.7	28.0	0/−0.7	31.5	0/−0.7	0.8	±0.05
FS	27.5	±0.4	19.0	0/−0.7	29.0	0/−0.7	31.5	0/−0.7	0.8	±0.05
FY	27.5	±0.4	22.0	0/−0.7	37.0	0/−0.7	31.5	0/−0.7	0.8	±0.05
RB	37.5	±0.5	11.0	0/−0.7	22.0	0/−0.7	41.0	0/−0.7	1	±0.05
RF	37.5	±0.5	13.0	0/−0.7	24.0	0/−0.7	41.0	0/−0.7	1	±0.05
RH	37.5	±0.5	15.0	0/−0.7	26.0	0/−0.7	41.0	0/−0.7	1	±0.05
RC	37.5	±0.5	16.0	0/−0.7	28.5	0/−0.7	41.0	0/−0.7	1	±0.05
RD	37.5	±0.5	19.0	0/−0.7	32.0	0/−0.7	41.0	0/−0.7	1	±0.05
RP	37.5	±0.5	21.0	0/−0.7	38.0	0/−0.7	41.0	0/−0.7	1	±0.05
RO	37.5	±0.5	24.0	0/−0.7	44.0	0/−0.7	41.0	0/−0.7	1	±0.05
RU	37.5	±0.5	30.0	0/−0.7	45.0	0/−0.7	41.0	0/−0.7	1	±0.05
Note: See Ordering Options Table for lead length (LL) options.										

Performance Characteristics

Sections	1	1	1	1	1	1	1	2	2
Voltage Range (VDC)	100	250	300	400	450	630	1,000	1,600	2,000
Voltage Range (VAC)	63	160	160	220	220	250	250	650	700
Capacitance Range (µF)	0.001 - 0.22	0.001 - 27	0.033 - 18	0.001 - 10	0.1 - 3.9	0.001 - 5.6	0.0027 - 3.3	0.0047 - 0.047	0.001 - 0.027

Capacitance Values	In accordance with IEC E12 series
Capacitance Tolerance	±5%, other tolerances on request
Category Temperature Range	−55°C to +105°C
Rated Temperature	+85°C
Voltage Derating	The rated voltage is decreased by 1.3%/°C between +85°C and +105°C
Climatic Category	IEC 60068–1, 55/105/56
Passive Flammability	Category B according to IEC 60065
Maximum Pulse Steepness	dv/dt according to Part Number Table. For peak to peak voltages lower than rated voltage ($V_{PP} < V_R$), the specified dv/dt can be multiplied by the factor V_R/V_{PP}.
Temperature Coefficient	−200 (+50, −100) ppm/°C (at 1 kHz)
Self-Inductance L	Approximately 6 nH/cm for the total length of capacitor winding and the leads

Dissipation Factor tand	Maximum Values at +23°C			
		C ≤ 0.1 µF	0.1 µF < C ≤ 1.0 µF	C > 1.0 µF
	1 kHz	0.0005	0.0005	0.001
	10 kHz	–	0.001	–
	100 kHz	0.0025	–	–

Insulation Resistance	Measured at +23°C, 100 VDC 60 seconds for V_R < 500 VDC and at 500 VDC for V_R ≥ 500 VDC	
	Between Terminals	
	C ≤ 0.33 µF	≥ 100,000 MΩ
	C > 0.33 µF	≥ 30,000 MΩ • µF
	Between Terminals and Case	
		≥ 100,000 MΩ

Derating of V_{rms} vs. Frequency, ≤85°C Ambient Temperature and with 10°C Internal Heating, Typical Values

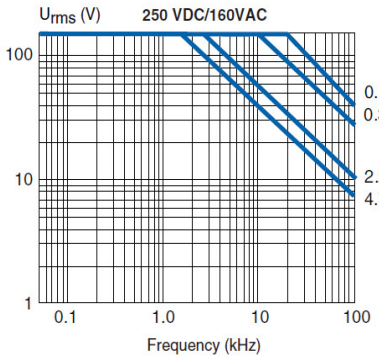

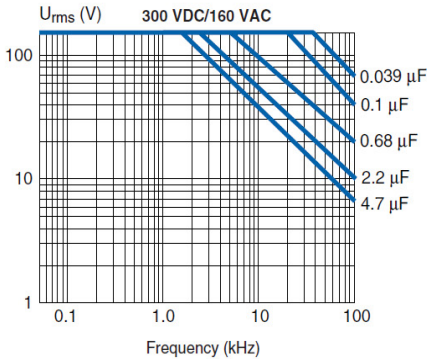

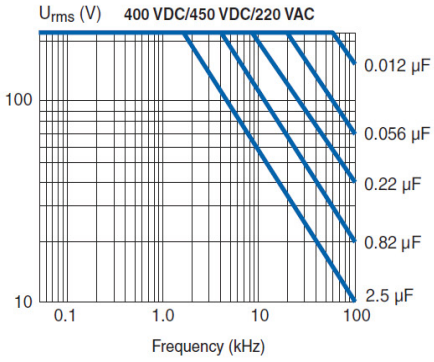

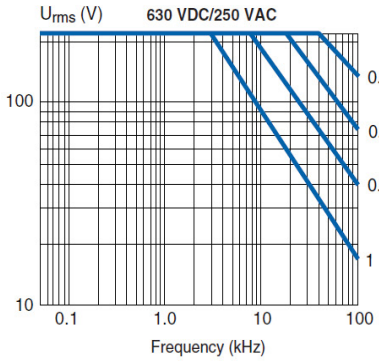

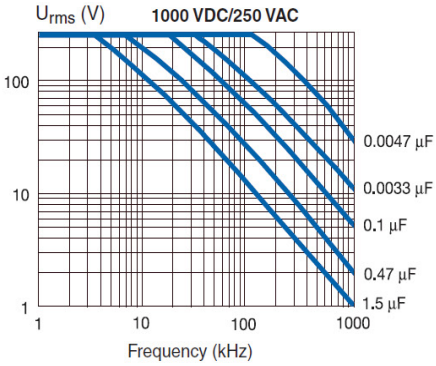

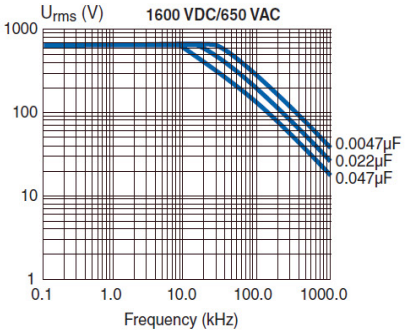

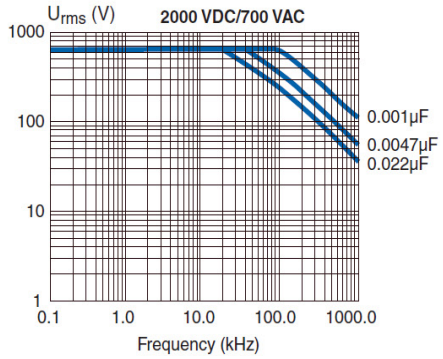

Environmental Test Data

Test	IEC Publication	Procedure	Requirements
Voltage Proof	60384–1 Clause 4.6	1.6 x V_R after 60 seconds	The capacitors must withstand the voltage without breakdowns or flashovers and without decreased insulation resistance below the value in each detail specification. No visible damage
	Clause 4.6 2.3	2 x V_R (minimum 400 VDC to case) after 60 seconds	As above
Vibration	60068–2–6 Test Fc	6 hours with 10 – 500 Hz and 0.75 mm amplitude or 98 m/s^2 depending on frequency	No visible damage tanδ ≤ 1.2 x stated value at 100 kHz Δ C/C ≤ ±0.5%
Bump	60068–2–29 Test Eb	4,000 bumps with 390 m/s^2 mounted on PCB	Δ C/C ≤ ±0.5% tanδ ≤ 1.2 x stated value at 100 kHz Insulation resistance: ≥ 100,000 MΩ for C_R ≤ 0.33 µF ≥ 30,000 MΩ, µF for C_R > 0.33 µF
Resistance to Soldering Heat	60068–2–20 Method 1A	Solder bath at +260°C ±5°C with screening	Immersion of the terminations into the solder bath shall be completed in a time not exceeding 1 second and the terminations shall remain immersed to the specified depth for 10 +1 second and then be withdrawn. Δ C/C ≤ ±1.0% tanδ increase < 0.001 No visible damage
Climatic Sequence	60384–1 Paragraph 4:21	60068–2.2 dry heat 16 hours 60068–2–34 damp heat, one cycle, 60068–2–1 Test Aa 2 hours	Insulation resistance: ≥ 100,000 MΩ for C_R ≤ 0.33 µF ≥ 30,000 MΩ, µF for C_R > 0.33 µF Δ C/C ≤ ±0.5% tanδ ≤ 1.2 x stated value at 100 kHz
Damp Heat Steady State	60068–2–3 Test Ca	+40°C and 90% – D1095% RH	56 days no visible damage Insulation resistance: ≥ 50,000 MΩ for C_R ≤ 0.33 µF ≥ 15,000 MΩ • µF for C_R > 0.33 µF Δ C/C ≤ ±1% tanδ ≤ 1.2 x stated value at 100 kHz
Endurance, AC		1,000 hours at +85°C and 1.25 x V_R AC	No visible damage Δ C/C ≤ ±3% tanδ ≤ 1.5 x stated value at 100 kHz Insulation resistance: ≥ 100,000 MΩ for C_R ≤ 0.33 µF ≥ 30,000 MΩ, µF for C_R > 0.33 µF
Charge and Discharge	60384–17 Paragraph 4.13	10,000 pulses and with (2 x) dV/dt according to detail specification	tanδ (100 kHz) ≤ 2 x stated value (100 kHz) Δ C/C ≤ ±0.5% Insulation resistance: ≥ 50,000 MΩ for C_R ≤ 0.33 µF ≥ 15,000 MΩ, µF for C_R > 0.33 µF

Environmental Compliance

All KEMET pulse capacitors are RoHS compliant.

Table 1 – Ratings & Part Number Reference

VDC	VAC	Capacitance Value (µF)	Box Code	Max Dimensions in mm			Lead Spacing (S)	dV/dt (V/µs)	Rthha °C/W 85°C 0.2m/s	KEMET Part Number	Legacy Part Number
				T	H	L					
1 Section											
100	63	0.001	J01	2.5	6.5	7.2	5	100	230	F426JF102J100(1)	PHE426DJ4100J(1)
100	63	0.0012	J01	2.5	6.5	7.2	5	100	230	F426JF122J100(1)	PHE426DJ4120J(1)
100	63	0.0015	J01	2.5	6.5	7.2	5	100	230	F426JF152J100(1)	PHE426DJ4150J(1)
100	63	0.0018	J01	2.5	6.5	7.2	5	100	230	F426JF182J100(1)	PHE426DJ4180J(1)
100	63	0.0022	J01	2.5	6.5	7.2	5	100	230	F426JF222J100(1)	PHE426DJ4220J(1)
100	63	0.0027	J01	2.5	6.5	7.2	5	100	230	F426JF272J100(1)	PHE426DJ4270J(1)
100	63	0.0033	J01	2.5	6.5	7.2	5	100	230	F426JF332J100(1)	PHE426DJ4330J(1)
100	63	0.0039	J01	2.5	6.5	7.2	5	100	230	F426JF392J100(1)	PHE426DJ4390J(1)
100	63	0.0047	J01	2.5	6.5	7.2	5	100	230	F426JF472J100(1)	PHE426DJ4470J(1)
100	63	0.0056	J01	2.5	6.5	7.2	5	100	230	F426JF562J100(1)	PHE426DJ4560J(1)
100	63	0.0068	J01	2.5	6.5	7.2	5	100	230	F426JF682J100(1)	PHE426DJ4680J(1)
100	63	0.0082	J01	2.5	6.5	7.2	5	100	230	F426JF822J100(1)	PHE426DJ4820J(1)
100	63	0.01	J01	2.5	6.5	7.2	5	100	230	F426JF103J100(1)	PHE426DJ5100J(1)
100	63	0.012	J01	2.5	6.5	7.2	5	100	230	F426JF123J100(1)	PHE426DJ5120J(1)
100	63	0.015	J01	2.5	6.5	7.2	5	100	230	F426JF153J100(1)	PHE426DJ5150J(1)
100	63	0.018	J02	3.5	8	7.2	5	100	230	F426JJ183J100(1)	PHE426DJ5180J(1)
100	63	0.022	J02	3.5	8	7.2	5	100	230	F426JJ223J100(1)	PHE426DJ5220J(1)
100	63	0.027	J02	3.5	8	7.2	5	100	230	F426JJ273J100(1)	PHE426DJ5270J(1)
100	63	0.033	J02	3.5	8	7.2	5	100	230	F426JJ333J100(1)	PHE426DJ5330J(1)
100	63	0.039	J02	3.5	8	7.2	5	100	230	F426JJ393J100(1)	PHE426DJ5390J(1)
100	63	0.047	J02	3.5	8	7.2	5	100	230	F426JJ473J100(1)	PHE426DJ5470J(1)
100	63	0.056	J03	4.5	9	7.2	5	100	230	F426JL563J100(1)	PHE426DJ5560J(1)
100	63	0.068	J03	4.5	9	7.2	5	100	230	F426JL683J100(1)	PHE426DJ5680J(1)
100	63	0.082	J04	5	10	7.2	5	100	230	F426JQ823J100(1)	PHE426DJ5820J(1)
100	63	0.1	J05	6	11	7.2	5	100	230	F426JT104J100(1)	PHE426DJ6100J(1)
100	63	0.12	J05	6	11	7.2	5	100	230	F426JT124J100(1)	PHE426DJ6120J(1)
100	63	0.15	J06	7.2	13	7.2	5	100	230	F426JU154J100(1)	PHE426DJ6150J(1)
100	63	0.18	J06	7.2	13	7.2	5	100	230	F426JU184J100(1)	PHE426DJ6180J(1)
100	63	0.22	J06	7.2	13	7.2	5	100	230	F426JU224J100(1)	PHE426DJ6220J(1)
250	160	0.001	J01	2.5	6.5	7.2	5	40	230	F426JF102J250(1)	PHE426HJ4100J(1)
250	160	0.0012	J01	2.5	6.5	7.2	5	40	230	F426JF122J250(1)	PHE426HJ4120J(1)
250	160	0.0015	J01	2.5	6.5	7.2	5	40	230	F426JF152J250(1)	PHE426HJ4150J(1)
250	160	0.0018	J01	2.5	6.5	7.2	5	40	230	F426JF182J250(1)	PHE426HJ4180J(1)
250	160	0.0022	J01	2.5	6.5	7.2	5	40	230	F426JF222J250(1)	PHE426HJ4220J(1)
250	160	0.0027	J01	2.5	6.5	7.2	5	40	230	F426JF272J250(1)	PHE426HJ4270J(1)
250	160	0.0033	J01	2.5	6.5	7.2	5	40	230	F426JF332J250(1)	PHE426HJ4330J(1)
250	160	0.0039	J01	2.5	6.5	7.2	5	40	230	F426JF392J250(1)	PHE426HJ4390J(1)
250	160	0.0047	J01	2.5	6.5	7.2	5	40	230	F426JF472J250(1)	PHE426HJ4470J(1)
250	160	0.0056	J01	2.5	6.5	7.2	5	40	230	F426JF562J250(1)	PHE426HJ4560J(1)
250	160	0.0068	J01	2.5	6.5	7.2	5	40	230	F426JF682J250(1)	PHE426HJ4680J(1)
250	160	0.0082	J01	2.5	6.5	7.2	5	40	230	F426JF822J250(1)	PHE426HJ4820J(1)
250	160	0.01	J01	2.5	6.5	7.2	5	40	230	F426JF103J250(1)	PHE426HJ5100J(1)
250	160	0.012	J01	2.5	6.5	7.2	5	40	230	F426JF123J250(1)	PHE426HJ5120J(1)
250	160	0.015	J01	2.5	6.5	7.2	5	40	230	F426JF153J250(1)	PHE426HJ5150J(1)
250	160	0.018	J02	3.5	8	7.2	5	40	230	F426JJ183J250(1)	PHE426HJ5180J(1)
250	160	0.022	J02	3.5	8	7.2	5	40	230	F426JJ223J250(1)	PHE426HJ5220J(1)
250	160	0.027	J02	3.5	8	7.2	5	40	230	F426JJ273J250(1)	PHE426HJ5270J(1)
250	160	0.033	J02	3.5	8	7.2	5	40	230	F426JJ333J250(1)	PHE426HJ5330J(1)
250	160	0.039	J02	3.5	8	7.2	5	40	230	F426JJ393J250(1)	PHE426HJ5390J(1)
250	160	0.047	J02	3.5	8	7.2	5	40	230	F426JJ473J250(1)	PHE426HJ5470J(1)
250	160	0.056	J03	4.5	9	7.2	5	40	230	F426JL563J250(1)	PHE426HJ5560J(1)
VDC	**VAC**	**Capacitance Value (µF)**	**Box Code**	**T (mm)**	**H (mm)**	**L (mm)**	**Lead Spacing (S)**	**dV/dt (V/µs)**	**Rthha °C/W 85°C 0.2m/s**	**KEMET Part Number**	**Legacy Part Number**

** Please note: These articles have a box code included in the article code.*
(1) Insert lead and packaging code. See Ordering Options Table for available options.

Table 1 – Ratings & Part Number Reference cont.

VDC	VAC	Capacitance Value (µF)	Box Code	Max Dimensions in mm			Lead Spacing (S)	dV/dt (V/µs)	Rthha °C/W 85°C 0.2m/s	KEMET Part Number	Legacy Part Number
				T	H	L					
250	160	0.068	J03	4.5	9	7.2	5	40	230	F426JL683J250(1)	PHE426HJ5680J(1)
250	160	0.082	J04	5	10	7.2	5	40	230	F426JQ823J250(1)	PHE426HJ5820J(1)
250	160	0.1	J05	6	11	7.2	5	40	230	F426JT104J250(1)	PHE426HJ6100J(1)
250	160	0.12	J05	6	11	7.2	5	40	230	F426JT124J250(1)	PHE426HJ6120J(1)
250	160	0.15	J06	7.2	13	7.2	5	40	230	F426JU154J250(1)	PHE426HJ6150J(1)
250	160	0.18	J06	7.2	13	7.2	5	40	230	F426JU184J250(1)	PHE426HJ6180J(1)
250	160	0.22	J06	7.2	13	7.2	5	40	230	F426JU224J250(1)	PHE426HJ6220J(1)
250	160	0.001	K01	4	8	10	7.5	180	160	F426KF102J250(1)	PHE426HK4100J(1)
250	160	0.0012	K01	4	8	10	7.5	180	160	F426KF122J250(1)	PHE426HK4120J(1)
250	160	0.0015	K01	4	8	10	7.5	180	160	F426KF152J250(1)	PHE426HK4150J(1)
250	160	0.0018	K01	4	8	10	7.5	180	160	F426KF182J250(1)	PHE426HK4180J(1)
250	160	0.0022	K01	4	8	10	7.5	180	160	F426KF222J250(1)	PHE426HK4220J(1)
250	160	0.0027	K01	4	8	10	7.5	180	160	F426KF272J250(1)	PHE426HK4270J(1)
250	160	0.0033	K01	4	8	10	7.5	180	160	F426KF332J250(1)	PHE426HK4330J(1)
250	160	0.0039	K01	4	8	10	7.5	180	160	F426KF392J250(1)	PHE426HK4390J(1)
250	160	0.0047	K01	4	8	10	7.5	180	160	F426KF472J250(1)	PHE426HK4470J(1)
250	160	0.0056	K01	4	8	10	7.5	180	160	F426KF562J250(1)	PHE426HK4560J(1)
250	160	0.0068	K01	4	8	10	7.5	180	160	F426KF682J250(1)	PHE426HK4680J(1)
250	160	0.0082	K01	4	8	10	7.5	180	160	F426KF822J250(1)	PHE426HK4820J(1)
250	160	0.01	K01	4	8	10	7.5	180	160	F426KF103J250(1)	PHE426HK5100J(1)
250	160	0.012	K01	4	8	10	7.5	180	160	F426KF123J250(1)	PHE426HK5120J(1)
250	160	0.015	K01	4	8	10	7.5	180	160	F426KF153J250(1)	PHE426HK5150J(1)
250	160	0.018	K01	4	8	10	7.5	180	160	F426KF183J250(1)	PHE426HK5180J(1)
250	160	0.022	K01	4	8	10	7.5	180	160	F426KF223J250(1)	PHE426HK5220J(1)
250	160	0.027	K01	4	8	10	7.5	180	160	F426KF273J250(1)	PHE426HK5270J(1)
250	160	0.033	K01	4	8	10	7.5	180	160	F426KF333J250(1)	PHE426HK5330J(1)
250	160	0.039	K01	4	8	10	7.5	180	160	F426KF393J250(1)	PHE426HK5390J(1)
250	160	0.047	K01	4	8	10	7.5	180	160	F426KF473J250(1)	PHE426HK5470J(1)
250	160	0.056	K01	4	8	10	7.5	180	160	F426KF563J250(1)	PHE426HK5560J(1)
250	160	0.068	K03	5	11	10	7.5	180	160	F426KK683J250(1)	PHE426HK5680J(1)
250	160	0.082	K03	5	11	10	7.5	180	160	F426KK823J250(1)	PHE426HK5820J(1)
250	160	0.1	K03	5	11	10	7.5	180	160	F426KK104J250(1)	PHE426HK6100J(1)
250	160	0.12	K04	6	12	10.5	7.5	180	160	F426KM124J250(1)	PHE426HK6120J(1)
250	160	0.15	K04	6	12	10.5	7.5	180	160	F426KM154J250(1)	PHE426HK6150J(1)
250	160	0.068	A01	4	9	13	10	160	135	F426AG683J250(1)	PHE426HA5680J(1)
250	160	0.082	A01	4	9	13	10	160	135	F426AG823J250(1)	PHE426HA5820J(1)
250	160	0.1	A02	4.5	10.5	13	10	160	120	F426AH104J250(1)	PHE426HA6100J(1)
250	160	0.12	A02	4.5	10.5	13	10	160	120	F426AH124J250(1)	PHE426HA6120J(1)
250	160	0.15	A03	5	11	13	10	160	113	F426AK154J250(1)	PHE426HA6150J(1)
250	160	0.18	A03	5	11	13	10	160	113	F426AK184J250(1)	PHE426HA6180J(1)
250	160	0.22	A04	6	12	13	10	160	105	F426AP224J250(1)	PHE426HA6220J(1)
250	160	0.18	B04	5.5	10.5	18	15	120	99	F426BD184J250(1)	PHE426HB6180J(1)
250	160	0.22	B04	5.5	10.5	18	15	120	99	F426BD224J250(1)	PHE426HB6220J(1)
250	160	0.27	B05	5.5	12.5	18	15	120	85	F426BE274J250(1)	PHE426HB6270J(1)
250	160	0.33	B15	6	12	18	15	120	83	F426BG334J250(1)	PHE426HB6330J(1)
250	160	0.39	B10	6.5	12.5	18	15	120	82	F426BJ394J250(1)	PHE426HB6390J(1)
250	160	0.47	B06	7.5	14.5	18	15	120	74	F426BL474J250(1)	PHE426HB6470J(1)
250	160	0.56	B06	7.5	14.5	18	15	120	74	F426BL564J250(1)	PHE426HB6560J(1)
250	160	0.68	B12	8	15	18	15	120	71	F426BM684J250(1)	PHE426HB6680J(1)
250	160	0.82	B11	8.5	16	18	15	120	64	F426BQ824J250(1)	PHE426HB6820J(1)
250	160	1	B14	9.5	17.5	18	15	120	60	F426BV105J250(1)	PHE426HB7100J(1)
250	160	0.68	D13	6.5	14.5	26	22.5	80	58	F426DD684J250(1)	PHE426HD6680J(1)
250	160	0.82	D17	7	16.5	26	22.5	80	53	F426DF824J250(1)	PHE426HD6820J(1)
VDC	**VAC**	**Capacitance Value (µF)**	**Box Code**	**T (mm)**	**H (mm)**	**L (mm)**	**Lead Spacing (S)**	**dV/dt (V/µs)**	**Rthha °C/W 85°C 0.2m/s**	**KEMET Part Number**	**Legacy Part Number**

** Please note: These articles have a box code included in the article code.*
(1) Insert lead and packaging code. See Ordering Options Table for available options.

Table 1 – Ratings & Part Number Reference cont.

VDC	VAC	Capacitance Value (µF)	Box Code	Max Dimensions in mm			Lead Spacing (S)	dV/dt (V/µs)	Rthha °C/W 85°C 0.2m/s	KEMET Part Number	Legacy Part Number
				T	H	L					
250	160	1	D17	7	16.5	26	22.5	80	53	F426DF105J250(1)	PHE426HD7100J(1)
250	160	1.2	D14	8	16	26	22.5	80	53	F426DH125J250(1)	PHE426HD7120J(1)
250	160	1.5	D15	9	18.5	26	22.5	80	48	F426DM155J250(1)	PHE426HD7150J(1)
250	160	1.8	D18	10.5	19	26	22.5	80	45	F426DR185J250(1)	PHE426HD7180J(1)
250	160	2.2	D16	11	21.5	26	22.5	80	40	F426DT225J250(1)	PHE426HD7220J(1)
250	160	2.7	D20	13.5	23	26	22.5	80	40	F426DW275J250(1)	PHE426HD7270J(1)
250	160	3.3	D20	13.5	23	26	22.5	80	40	F426DW335J250(1)	PHE426HD7330J(1)
250	160	3.9	D19	15.5	24.5	26	22.5	80	40	F426DY395J250(1)	PHE426HD7390J(1)
250	160	4.7	D19	15.5	24.5	26	22.5	80	40	F426DY475J250(1)	PHE426HD7470J(1)
250	160	2.2	F11	10.5	20.5	31.5	27.5	50	37	F426FE225J250(1)	PHE426HF7220J(1)
250	160	2.7	F11	10.5	20.5	31.5	27.5	50	37	F426FE275J250(1)	PHE426HF7270J(1)
250	160	2.7	F17	21	12.5	31.5	27.5	50	37	F426TH275J250(1)	PHE426HT7270J(1)
250	160	3.3	F12	11.5	22.5	31.5	27.5	50	34	F426FG335J250(1)	PHE426HF7330J(1)
250	160	3.9	F03	13.5	23	31.5	27.5	50	33	F426FK395J250(1)	PHE426HF7390J(1)
250	160	4.7	F03	13.5	23	31.5	27.5	50	32	F426FK475J250(1)	PHE426HF7470J(1)
250	160	5.6	F14	17.5	28	31.5	27.5	50	28	F426FR565J250(1)	PHE426HF7560J(1)
250	160	6.8	F14	17.5	28	31.5	27.5	50	28	F426FR685J250(1)	PHE426HF7680J(1)
250	160	6.8	F19	27.5	16	31.5	27.5	50	28	F426TQ685J250(1)	PHE426HT7680J(1)
250	160	8.2	F15	19	29	31.5	27.5	50	26	F426FS825J250(1)	PHE426HF7820J(1)
250	160	10	F16	21	30	31.5	27.5	50	26	F426FV106J250(1)	PHE426HF8100J(1)
250	160	10	F18	31	19	31.5	27.5	50	26	F426TT106J250(1)	PHE426HT8100J(1)
250	160	4.7	R05	13	24	41	37.5	30	27	F426RF475J250(1)	PHE426HR7470J(1)
250	160	5.6	R05	13	24	41	37.5	30	27	F426RF565J250(1)	PHE426HR7560J(1)
250	160	6.8	R04	15	26	41	37.5	30	25	F426RH685J250(1)	PHE426HR7680J(1)
250	160	8.2	R02	16.5	32	41	37.5	30	21	F426RD825J250(1)	PHE426HR7820J(1)
250	160	10	R02	16.5	32	41	37.5	30	21	F426RD106J250(1)	PHE426HR8100J(1)
250	160	12	R03	19	36	41	37.5	30	19	F426RM126J250(1)	PHE426HR8120J(1)
250	160	15	R03	19	36	41	37.5	30	19	F426RM156J250(1)	PHE426HR8150J(1)
250	160	18	R06	21	38	41	37.5	30	17	F426RP186J250(1)	PHE426HR8180J(1)
250	160	20	R06	21	38	41	37.5	30	17	F426RP206J250(1)	PHE426HR8200J(1)
250	160	22	R08	28	43	41	37.5	30	17	F426RS226J250(1)	PHE426HR8220J(1)
250	160	27	R08	28	43	41	37.5	30	17	F426RS276J250(1)	PHE426HR8270J(1)
300	160	0.033	A01	4	9	13	10	200	135	F426AG333J300(1)	PHE426JA5330J(1)
300	160	0.039	A01	4	9	13	10	200	135	F426AG393J300(1)	PHE426JA5390J(1)
300	160	0.047	A01	4	9	13	10	200	135	F426AG473J300(1)	PHE426JA5470J(1)
300	160	0.056	A01	4	9	13	10	200	135	F426AG563J300(1)	PHE426JA5560J(1)
300	160	0.068	A02	4.5	10.5	13	10	200	120	F426AH683J300(1)	PHE426JA5680J(1)
300	160	0.082	A02	4.5	10.5	13	10	200	120	F426AH823J300(1)	PHE426JA5820J(1)
300	160	0.1	A03	5	11	13	10	200	113	F426AK104J300(1)	PHE426JA6100J(1)
300	160	0.12	A03	5	11	13	10	200	113	F426AK124J300(1)	PHE426JA6120J(1)
300	160	0.15	A04	6	12	13	10	200	105	F426AP154J300(1)	PHE426JA6150J(1)
300	160	0.1	B04	5.5	10.5	18	15	150	99	F426BD104J300(1)	PHE426JB6100J(1)
300	160	0.12	B04	5.5	10.5	18	15	150	99	F426BD124J300(1)	PHE426JB6120J(1)
300	160	0.15	B04	5.5	10.5	18	15	150	99	F426BD154J300(1)	PHE426JB6150J(1)
300	160	0.18	B05	5.5	12.5	18	15	150	85	F426BE184J300(1)	PHE426JB6180J(1)
300	160	0.22	B15	6	12	18	15	150	83	F426BG224J300(1)	PHE426JB6220J(1)
300	160	0.27	B10	6.5	12.5	18	15	150	82	F426BJ274J300(1)	PHE426JB6270J(1)
300	160	0.33	B06	7.5	14.5	18	15	150	74	F426BL334J300(1)	PHE426JB6330J(1)
300	160	0.39	B06	7.5	14.5	18	15	150	74	F426BL394J300(1)	PHE426JB6390J(1)
300	160	0.47	B12	8	15	18	15	150	71	F426BM474J300(1)	PHE426JB6470J(1)
300	160	0.56	B11	8.5	16	18	15	150	64	F426BQ564J300(1)	PHE426JB6560J(1)
300	160	0.68	B14	9.5	17.5	18	15	150	60	F426BV684J300(1)	PHE426JB6680J(1)
300	160	0.33	D13	6.5	14.5	26	22.5	100	58	F426DD334J300(1)	PHE426JD6330J(1)
VDC	**VAC**	**Capacitance Value (µF)**	**Box Code**	**T (mm)**	**H (mm)**	**L (mm)**	**Lead Spacing (S)**	**dV/dt (V/µs)**	**Rthha °C/W 85°C 0.2m/s**	**KEMET Part Number**	**Legacy Part Number**

** Please note: These articles have a box code included in the article code.*
(1) Insert lead and packaging code. See Ordering Options Table for available options.

Table 1 – Ratings & Part Number Reference cont.

VDC	VAC	Capacitance Value (µF)	Box Code	Max Dimensions in mm			Lead Spacing (S)	dV/dt (V/µs)	Rthha °C/W 85°C 0.2m/s	KEMET Part Number	Legacy Part Number
				T	H	L					
300	160	0.39	D13	6.5	14.5	26	22.5	100	58	F426DD394J300(1)	PHE426JD6390J(1)
300	160	0.47	D13	6.5	14.5	26	22.5	100	58	F426DD474J300(1)	PHE426JD6470J(1)
300	160	0.56	D13	6.5	14.5	26	22.5	100	58	F426DD564J300(1)	PHE426JD6560J(1)
300	160	0.68	D17	7	16.5	26	22.5	100	53	F426DF684J300(1)	PHE426JD6680J(1)
300	160	0.82	D14	8	16	26	22.5	100	53	F426DH824J300(1)	PHE426JD6820J(1)
300	160	1	D15	9	18.5	26	22.5	100	48	F426DM105J300(1)	PHE426JD7100J(1)
300	160	1.2	D18	10.5	19	26	22.5	100	45	F426DR125J300(1)	PHE426JD7120J(1)
300	160	1.5	D16	11	21.5	26	22.5	100	40	F426DT155J300(1)	PHE426JD7150J(1)
300	160	1.8	D20	13.5	23	26	22.5	100	40	F426DW185J300(1)	PHE426JD7180J(1)
300	160	2.2	D20	13.5	23	26	22.5	100	40	F426DW225J300(1)	PHE426JD7220J(1)
300	160	2.7	D19	15.5	24.5	26	22.5	100	40	F426DY275J300(1)	PHE426JD7270J(1)
300	160	1	F11	10.5	20.5	31.5	27.5	70	37	F426FE105J300(1)	PHE426JF7100J(1)
300	160	1.2	F11	10.5	20.5	31.5	27.5	70	37	F426FE125J300(1)	PHE426JF7120J(1)
300	160	1.5	F11	10.5	20.5	31.5	27.5	70	37	F426FE155J300(1)	PHE426JF7150J(1)
300	160	1.8	F11	10.5	20.5	31.5	27.5	70	37	F426FE185J300(1)	PHE426JF7180J(1)
300	160	1.8	F17	21	12.5	31.5	27.5	70	37	F426TH185J300(1)	PHE426JT7180J(1)
300	160	2.2	F12	11.5	22.5	31.5	27.5	70	34	F426FG225J300(1)	PHE426JF7220J(1)
300	160	2.7	F03	13.5	23	31.5	27.5	70	33	F426FK275J300(1)	PHE426JF7270J(1)
300	160	3.3	F13	14.5	24.5	31.5	27.5	70	32	F426FM335J300(1)	PHE426JF7330J(1)
300	160	3.9	F14	17.5	28	31.5	27.5	70	28	F426FR395J300(1)	PHE426JF7390J(1)
300	160	3.9	F19	27.5	16	31.5	27.5	70	28	F426TQ395J300(1)	PHE426JT7390J(1)
300	160	4.7	F14	17.5	28	31.5	27.5	70	28	F426FR475J300(1)	PHE426JF7470J(1)
300	160	5.6	F15	19	29	31.5	27.5	70	26	F426FS565J300(1)	PHE426JF7560J(1)
300	160	5.6	F18	31	19	31.5	27.5	70	26	F426TT565J300(1)	PHE426JT7560J(1)
300	160	6.8	F16	21	30	31.5	27.5	70	26	F426FV685J300(1)	PHE426JF7680J(1)
300	160	3.3	R05	13	24	41	37.5	40	27	F426RF335J300(1)	PHE426JR7330J(1)
300	160	3.9	R05	13	24	41	37.5	40	27	F426RF395J300(1)	PHE426JR7390J(1)
300	160	4.7	R04	15	26	41	37.5	40	25	F426RH475J300(1)	PHE426JR7470J(1)
300	160	5.6	R02	16.5	32	41	37.5	40	21	F426RD565J300(1)	PHE426JR7560J(1)
300	160	6.8	R02	16.5	32	41	37.5	40	21	F426RD685J300(1)	PHE426JR7680J(1)
300	160	8.2	R03	19	36	41	37.5	40	19	F426RM825J300(1)	PHE426JR7820J(1)
300	160	10	R03	19	36	41	37.5	40	19	F426RM106J300(1)	PHE426JR8100J(1)
300	160	12	R06	21	38	41	37.5	40	17	F426RP126J300(1)	PHE426JR8120J(1)
300	160	15	R08	28	43	41	37.5	40	17	F426RS156J300(1)	PHE426JR8150J(1)
300	160	18	R08	28	43	41	37.5	40	17	F426RS186J300(1)	PHE426JR8180J(1)
400	220	0.001	J01	2.5	6.5	7.2	5	30	230	F426JF102J400(1)	PHE426KJ4100J(1)
400	220	0.0012	J01	2.5	6.5	7.2	5	30	230	F426JF122J400(1)	PHE426KJ4120J(1)
400	220	0.0015	J01	2.5	6.5	7.2	5	30	230	F426JF152J400(1)	PHE426KJ4150J(1)
400	220	0.0018	J01	2.5	6.5	7.2	5	30	230	F426JF182J400(1)	PHE426KJ4180J(1)
400	220	0.0022	J01	2.5	6.5	7.2	5	30	230	F426JF222J400(1)	PHE426KJ4220J(1)
400	220	0.0027	J01	2.5	6.5	7.2	5	30	230	F426JF272J400(1)	PHE426KJ4270J(1)
400	220	0.0033	J01	2.5	6.5	7.2	5	30	230	F426JF332J400(1)	PHE426KJ4330J(1)
400	220	0.0039	J01	2.5	6.5	7.2	5	30	230	F426JF392J400(1)	PHE426KJ4390J(1)
400	220	0.0047	J01	2.5	6.5	7.2	5	30	230	F426JF472J400(1)	PHE426KJ4470J(1)
400	220	0.0056	J01	2.5	6.5	7.2	5	30	230	F426JF562J400(1)	PHE426KJ4560J(1)
400	220	0.0068	J01	2.5	6.5	7.2	5	30	230	F426JF682J400(1)	PHE426KJ4680J(1)
400	220	0.0082	J02	3.5	8	7.2	5	30	230	F426JJ822J400(1)	PHE426KJ4820J(1)
400	220	0.01	J02	3.5	8	7.2	5	30	230	F426JJ103J400(1)	PHE426KJ5100J(1)
400	220	0.012	J02	3.5	8	7.2	5	30	230	F426JJ123J400(1)	PHE426KJ5120J(1)
400	220	0.015	J02	3.5	8	7.2	5	30	230	F426JJ153J400(1)	PHE426KJ5150J(1)
400	220	0.018	J02	3.5	8	7.2	5	30	230	F426JJ183J400(1)	PHE426KJ5180J(1)
400	220	0.022	J02	3.5	8	7.2	5	30	230	F426JJ223J400(1)	PHE426KJ5220J(1)
400	220	0.027	J03	4.5	9	7.2	5	30	230	F426JL273J400(1)	PHE426KJ5270J(1)
VDC	**VAC**	**Capacitance Value (µF)**	**Box Code**	**T (mm)**	**H (mm)**	**L (mm)**	**Lead Spacing (S)**	**dV/dt (V/µs)**	**Rthha °C/W 85°C 0.2m/s**	**KEMET Part Number**	**Legacy Part Number**

** Please note: These articles have a box code included in the article code.*
(1) Insert lead and packaging code. See Ordering Options Table for available options.

Table 1 – Ratings & Part Number Reference cont.

VDC	VAC	Capacitance Value (µF)	Box Code	Max Dimensions in mm			Lead Spacing (S)	dV/dt (V/µs)	Rthha °C/W 85°C 0.2m/s	KEMET Part Number	Legacy Part Number
				T	H	L					
400	220	0.033	J03	4.5	9	7.2	5	30	230	F426JL333J400(1)	PHE426KJ5330J(1)
400	220	0.039	J04	5	10	7.2	5	30	230	F426JQ393J400(1)	PHE426KJ5390J(1)
400	220	0.047	J05	6	11	7.2	5	30	230	F426JT473J400(1)	PHE426KJ5470J(1)
400	220	0.056	J05	6	11	7.2	5	30	230	F426JT563J400(1)	PHE426KJ5560J(1)
400	220	0.068	J06	7.2	13	7.2	5	30	230	F426JU683J400(1)	PHE426KJ5680J(1)
400	220	0.001	K01	4	8	10	7.5	200	160	F426KF102J400(1)	PHE426KK4100J(1)
400	220	0.0012	K01	4	8	10	7.5	200	160	F426KF122J400(1)	PHE426KK4120J(1)
400	220	0.0015	K01	4	8	10	7.5	200	160	F426KF152J400(1)	PHE426KK4150J(1)
400	220	0.0018	K01	4	8	10	7.5	200	160	F426KF182J400(1)	PHE426KK4180J(1)
400	220	0.0022	K01	4	8	10	7.5	200	160	F426KF222J400(1)	PHE426KK4220J(1)
400	220	0.0027	K01	4	8	10	7.5	200	160	F426KF272J400(1)	PHE426KK4270J(1)
400	220	0.0033	K01	4	8	10	7.5	200	160	F426KF332J400(1)	PHE426KK4330J(1)
400	220	0.0039	K01	4	8	10	7.5	200	160	F426KF392J400(1)	PHE426KK4390J(1)
400	220	0.0047	K01	4	8	10	7.5	200	160	F426KF472J400(1)	PHE426KK4470J(1)
400	220	0.0056	K01	4	8	10	7.5	200	160	F426KF562J400(1)	PHE426KK4560J(1)
400	220	0.0068	K01	4	8	10	7.5	200	160	F426KF682J400(1)	PHE426KK4680J(1)
400	220	0.0082	K01	4	8	10	7.5	200	160	F426KF822J400(1)	PHE426KK4820J(1)
400	220	0.01	K01	4	8	10	7.5	200	160	F426KF103J400(1)	PHE426KK5100J(1)
400	220	0.012	K01	4	8	10	7.5	200	160	F426KF123J400(1)	PHE426KK5120J(1)
400	220	0.015	K01	4	8	10	7.5	200	160	F426KF153J400(1)	PHE426KK5150J(1)
400	220	0.018	K01	4	8	10	7.5	200	160	F426KF183J400(1)	PHE426KK5180J(1)
400	220	0.022	K01	4	8	10	7.5	200	160	F426KF223J400(1)	PHE426KK5220J(1)
400	220	0.027	K01	4	8	10	7.5	200	160	F426KF273J400(1)	PHE426KK5270J(1)
400	220	0.033	K03	5	11	10	7.5	200	160	F426KK333J400(1)	PHE426KK5330J(1)
400	220	0.039	K03	5	11	10	7.5	200	160	F426KK393J400(1)	PHE426KK5390J(1)
400	220	0.047	K03	5	11	10	7.5	200	160	F426KK473J400(1)	PHE426KK5470J(1)
400	220	0.056	K04	6	12	10.5	7.5	200	160	F426KM563J400(1)	PHE426KK5560J(1)
400	220	0.068	K04	6	12	10.5	7.5	200	160	F426KM683J400(1)	PHE426KK5680J(1)
400	220	0.022	A01	4	9	13	10	300	135	F426AG223J400(1)	PHE426KA5220J(1)
400	220	0.027	A01	4	9	13	10	300	135	F426AG273J400(1)	PHE426KA5270J(1)
400	220	0.033	A02	4.5	10.5	13	10	300	120	F426AH333J400(1)	PHE426KA5330J(1)
400	220	0.039	A02	4.5	10.5	13	10	300	120	F426AH393J400(1)	PHE426KA5390J(1)
400	220	0.047	A02	4.5	10.5	13	10	300	120	F426AH473J400(1)	PHE426KA5470J(1)
400	220	0.056	A03	5	11	13	10	300	113	F426AK563J400(1)	PHE426KA5560J(1)
400	220	0.068	A04	6	12	13	10	300	105	F426AP683J400(1)	PHE426KA5680J(1)
400	220	0.082	A04	6	12	13	10	300	105	F426AP823J400(1)	PHE426KA5820J(1)
400	220	0.068	B04	5.5	10.5	18	15	200	99	F426BD683J400(1)	PHE426KB5680J(1)
400	220	0.082	B04	5.5	10.5	18	15	200	99	F426BD823J400(1)	PHE426KB5820J(1)
400	220	0.1	B04	5.5	10.5	18	15	200	99	F426BD104J400(1)	PHE426KB6100J(1)
400	220	0.12	B05	5.5	12.5	18	15	200	85	F426BE124J400(1)	PHE426KB6120J(1)
400	220	0.15	B10	6.5	12.5	18	15	200	84	F426BJ154J400(1)	PHE426KB6150J(1)
400	220	0.18	B06	7.5	14.5	18	15	200	74	F426BL184J400(1)	PHE426KB6180J(1)
400	220	0.22	B06	7.5	14.5	18	15	200	74	F426BL224J400(1)	PHE426KB6220J(1)
400	220	0.27	B12	8	15	18	15	200	71	F426BM274J400(1)	PHE426KB6270J(1)
400	220	0.33	B11	8.5	16	18	15	200	64	F426BQ334J400(1)	PHE426KB6330J(1)
400	220	0.39	B14	9.5	17.5	18	15	200	60	F426BV394J400(1)	PHE426KB6390J(1)
400	220	0.47	B14	9.5	17.5	18	15	200	60	F426BV474J400(1)	PHE426KB6470J(1)
400	220	0.18	D13	6.5	14.5	26	22.5	150	58	F426DD184J400(1)	PHE426KD6180J(1)
400	220	0.22	D13	6.5	14.5	26	22.5	150	58	F426DD224J400(1)	PHE426KD6220J(1)
400	220	0.27	D13	6.5	14.5	26	22.5	150	58	F426DD274J400(1)	PHE426KD6270J(1)
400	220	0.33	D13	6.5	14.5	26	22.5	150	58	F426DD334J400(1)	PHE426KD6330J(1)
400	220	0.39	D17	7	16.5	26	22.5	150	53	F426DF394J400(1)	PHE426KD6390J(1)
400	220	0.47	D14	8	16	26	22.5	150	53	F426DH474J400(1)	PHE426KD6470J(1)
VDC	**VAC**	**Capacitance Value (µF)**	**Box Code**	**T (mm)**	**H (mm)**	**L (mm)**	**Lead Spacing (S)**	**dV/dt (V/µs)**	**Rthha °C/W 85°C 0.2m/s**	**KEMET Part Number**	**Legacy Part Number**

** Please note: These articles have a box code included in the article code.*
(1) Insert lead and packaging code. See Ordering Options Table for available options.

Table 1 – Ratings & Part Number Reference cont.

VDC	VAC	Capacitance Value (µF)	Box Code	Max Dimensions in mm			Lead Spacing (S)	dV/dt (V/µs)	Rthha °C/W 85°C 0.2m/s	KEMET Part Number	Legacy Part Number
				T	H	L					
400	220	0.56	D15	9	18.5	26	22.5	150	48	F426DM564J400(1)	PHE426KD6560J(1)
400	220	0.68	D15	9	18.5	26	22.5	150	48	F426DM684J400(1)	PHE426KD6680J(1)
400	220	0.82	D18	10.5	19	26	22.5	150	45	F426DR824J400(1)	PHE426KD6820J(1)
400	220	1	D16	11	21.5	26	22.5	150	40	F426DT105J400(1)	PHE426KD7100J(1)
400	220	1.2	D20	13.5	23	26	22.5	150	40	F426DW125J400(1)	PHE426KD7120J(1)
400	220	1.5	D20	13.5	23	26	22.5	150	40	F426DW155J400(1)	PHE426KD7150J(1)
400	220	1.8	D19	15.5	24.5	26	22.5	150	40	F426DY185J400(1)	PHE426KD7180J(1)
400	220	0.56	F11	10.5	20.5	31.5	27.5	90	37	F426FE564J400(1)	PHE426KF6560J(1)
400	220	0.68	F11	10.5	20.5	31.5	27.5	90	37	F426FE684J400(1)	PHE426KF6680J(1)
400	220	0.82	F11	10.5	20.5	31.5	27.5	90	37	F426FE824J400(1)	PHE426KF6820J(1)
400	220	1	F11	10.5	20.5	31.5	27.5	90	34	F426FE105J400(1)	PHE426KF7100J(1)
400	220	1.2	F11	10.5	20.5	31.5	27.5	90	34	F426FE125J400(1)	PHE426KF7120J(1)
400	220	1.2	F17	21	12.5	31.5	27.5	90	34	F426TH125J400(1)	PHE426KT7120J(1)
400	220	1.5	F12	11.5	22.5	31.5	27.5	90	32	F426FG155J400(1)	PHE426KF7150J(1)
400	220	1.8	F03	13.5	23	31.5	27.5	90	28	F426FK185J400(1)	PHE426KF7180J(1)
400	220	2.2	F13	14.5	24.5	31.5	27.5	90	28	F426FM225J400(1)	PHE426KF7220J(1)
400	220	2.7	F14	17.5	28	31.5	27.5	90	26	F426FR275J400(1)	PHE426KF7270J(1)
400	220	2.7	F19	27.5	16	31.5	27.5	90	26	F426TQ275J400(1)	PHE426KT7270J(1)
400	220	3.3	F15	19	29	31.5	27.5	90	26	F426FS335J400(1)	PHE426KF7330J(1)
400	220	3.9	F16	21	30	31.5	27.5	90	26	F426FV395J400(1)	PHE426KF7390J(1)
400	220	3.9	F18	31	19	31.5	27.5	90	26	F426TT395J400(1)	PHE426KT7390J(1)
400	220	1.5	R05	13	24	41	37.5	60	27	F426RF155J400(1)	PHE426KR7150J(1)
400	220	1.8	R05	13	24	41	37.5	60	27	F426RF185J400(1)	PHE426KR7180J(1)
400	220	2.2	R05	13	24	41	37.5	60	27	F426RF225J400(1)	PHE426KR7220J(1)
400	220	2.7	R04	15	26	41	37.5	60	25	F426RH275J400(1)	PHE426KR7270J(1)
400	220	3.3	R02	16.5	32	41	37.5	60	21	F426RD335J400(1)	PHE426KR7330J(1)
400	220	3.9	R02	16.5	32	41	37.5	60	21	F426RD395J400(1)	PHE426KR7390J(1)
400	220	4.7	R03	19	36	41	37.5	60	19	F426RM475J400(1)	PHE426KR7470J(1)
400	220	5.6	R03	19	36	41	37.5	60	19	F426RM565J400(1)	PHE426KR7560J(1)
400	220	6.8	R06	21	38	41	37.5	60	17	F426RP685J400(1)	PHE426KR7680J(1)
400	220	8.2	R08	28	43	41	37.5	60	17	F426RS825J400(1)	PHE426KR7820J(1)
400	220	10	R08	28	43	41	37.5	60	17	F426RS106J400(1)	PHE426KR8100J(1)
450	220	0.1	B04	5.5	10.5	18	15	200	99	F426BD104J450(1)	PHE426LB6100J(1)
450	220	0.12	B05	5.5	12.5	18	15	200	85	F426BE124J450(1)	PHE426LB6120J(1)
450	220	0.15	B10	6.5	12.5	18	15	200	84	F426BJ154J450(1)	PHE426LB6150J(1)
450	220	0.18	B06	7.5	14.5	18	15	200	74	F426BL184J450(1)	PHE426LB6180J(1)
450	220	0.22	B06	7.5	14.5	18	15	200	74	F426BL224J450(1)	PHE426LB6220J(1)
450	220	0.27	B12	8	15	18	15	200	71	F426BM274J450(1)	PHE426LB6270J(1)
450	220	0.33	B11	8.5	16	18	15	200	64	F426BQ334J450(1)	PHE426LB6330J(1)
450	220	0.39	B14	9.5	17.5	18	15	200	60	F426BV394J450(1)	PHE426LB6390J(1)
450	220	0.47	B14	9.5	17.5	18	15	200	60	F426BV474J450(1)	PHE426LB6470J(1)
450	220	0.18	D13	6.5	14.5	26	22.5	150	58	F426DD184J450(1)	PHE426LD6180J(1)
450	220	0.22	D13	6.5	14.5	26	22.5	150	58	F426DD224J450(1)	PHE426LD6220J(1)
450	220	0.27	D13	6.5	14.5	26	22.5	150	58	F426DD274J450(1)	PHE426LD6270J(1)
450	220	0.33	D13	6.5	14.5	26	22.5	150	58	F426DD334J450(1)	PHE426LD6330J(1)
450	220	0.39	D17	7	16.5	26	22.5	150	53	F426DF394J450(1)	PHE426LD6390J(1)
450	220	0.47	D14	8	16	26	22.5	150	53	F426DH474J450(1)	PHE426LD6470J(1)
450	220	0.56	D15	9	18.5	26	22.5	150	48	F426DM564J450(1)	PHE426LD6560J(1)
450	220	0.68	D15	9	18.5	26	22.5	150	48	F426DM684J450(1)	PHE426LD6680J(1)
450	220	0.82	D18	10.5	19	26	22.5	150	45	F426DR824J450(1)	PHE426LD6820J(1)
450	220	1	D16	11	21.5	26	22.5	150	40	F426DT105J450(1)	PHE426LD7100J(1)
450	220	1.2	D20	13.5	23	26	22.5	150	40	F426DW125J450(1)	PHE426LD7120J(1)
450	220	1.5	D20	13.5	23	26	22.5	150	40	F426DW155J450(1)	PHE426LD7150J(1)
VDC	**VAC**	**Capacitance Value (µF)**	**Box Code**	**T (mm)**	**H (mm)**	**L (mm)**	**Lead Spacing (S)**	**dV/dt (V/µs)**	**Rthha °C/W 85°C 0.2m/s**	**KEMET Part Number**	**Legacy Part Number**

** Please note: These articles have a box code included in the article code.*
(1) Insert lead and packaging code. See Ordering Options Table for available options.

Table 1 – Ratings & Part Number Reference cont.

VDC	VAC	Capacitance Value (µF)	Box Code	Max Dimensions in mm			Lead Spacing (S)	dV/dt (V/µs)	Rthha °C/W 85°C 0.2m/s	KEMET Part Number	Legacy Part Number
				T	H	L					
450	220	1.8	D19	15.5	24.5	26	22.5	150	40	F426DY185J450(1)	PHE426LD7180J(1)
450	220	0.56	F11	10.5	20.5	31.5	27.5	90	37	F426FE564J450(1)	PHE426LF6560J(1)
450	220	0.68	F11	10.5	20.5	31.5	27.5	90	37	F426FE684J450(1)	PHE426LF6680J(1)
450	220	0.82	F11	10.5	20.5	31.5	27.5	90	37	F426FE824J450(1)	PHE426LF6820J(1)
450	220	1	F11	10.5	20.5	31.5	27.5	90	34	F426FE105J450(1)	PHE426LF7100J(1)
450	220	1.2	F11	10.5	20.5	31.5	27.5	90	34	F426FE125J450(1)	PHE426LF7120J(1)
450	220	1.5	F12	11.5	22.5	31.5	27.5	90	32	F426FG155J450(1)	PHE426LF7150J(1)
450	220	1.8	F03	13.5	23	31.5	27.5	90	28	F426FK185J450(1)	PHE426LF7180J(1)
450	220	2.2	F13	14.5	24.5	31.5	27.5	90	28	F426FM225J450(1)	PHE426LF7220J(1)
450	220	2.7	F14	17.5	28	31.5	27.5	90	26	F426FR275J450(1)	PHE426LF7270J(1)
450	220	3.3	F15	19	29	31.5	27.5	90	26	F426FS335J450(1)	PHE426LF7330J(1)
450	220	3.9	F16	21	30	31.5	27.5	90	26	F426FV395J450(1)	PHE426LF7390J(1)
600	250	0.001	J01	2.5	6.5	7.2	5	30	230	F426JF102J600(1)	PHE426MJ4100J(1)
600	250	0.0012	J01	2.5	6.5	7.2	5	30	230	F426JF122J600(1)	PHE426MJ4120J(1)
600	250	0.0015	J01	2.5	6.5	7.2	5	30	230	F426JF152J600(1)	PHE426MJ4150J(1)
600	250	0.0018	J01	2.5	6.5	7.2	5	30	230	F426JF182J600(1)	PHE426MJ4180J(1)
600	250	0.0022	J01	2.5	6.5	7.2	5	30	230	F426JF222J600(1)	PHE426MJ4220J(1)
600	250	0.0027	J01	2.5	6.5	7.2	5	30	230	F426JF272J600(1)	PHE426MJ4270J(1)
600	250	0.0033	J01	2.5	6.5	7.2	5	30	230	F426JF332J600(1)	PHE426MJ4330J(1)
600	250	0.0039	J01	2.5	6.5	7.2	5	30	230	F426JF392J600(1)	PHE426MJ4390J(1)
600	250	0.0047	J02	3.5	8	7.2	5	30	230	F426JJ472J600(1)	PHE426MJ4470J(1)
600	250	0.0056	J02	3.5	8	7.2	5	30	230	F426JJ562J600(1)	PHE426MJ4560J(1)
600	250	0.0068	J03	4.5	9	7.2	5	30	230	F426JL682J600(1)	PHE426MJ4680J(1)
600	250	0.0082	J03	4.5	9	7.2	5	30	230	F426JL822J600(1)	PHE426MJ4820J(1)
600	250	0.01	J03	4.5	9	7.2	5	30	230	F426JL103J600(1)	PHE426MJ5100J(1)
600	250	0.012	J04	5	10	7.2	5	30	230	F426JQ123J600(1)	PHE426MJ5120J(1)
600	250	0.015	J05	6	11	7.2	5	30	230	F426JT153J600(1)	PHE426MJ5150J(1)
600	250	0.018	J05	6	11	7.2	5	30	230	F426JT183J600(1)	PHE426MJ5180J(1)
600	250	0.022	J06	7.2	13	7.2	5	30	230	F426JU223J600(1)	PHE426MJ5220J(1)
600	250	0.027	J06	7.2	13	7.2	5	30	230	F426JU273J600(1)	PHE426MJ5270J(1)
600	250	0.033	J06	7.2	13	7.2	5	30	230	F426JU333J600(1)	PHE426MJ5330J(1)
600	250	0.039	J06	7.2	13	7.2	5	30	230	F426JU393J600(1)	PHE426MJ5390J(1)
600	250	0.047	J06	7.2	13	7.2	5	30	230	F426JU473J600(1)	PHE426MJ5470J(1)
600	250	0.001	K01	4	8	10	7.5	200	160	F426KF102J600(1)	PHE426MK4100J(1)
600	250	0.0012	K01	4	8	10	7.5	200	160	F426KF122J600(1)	PHE426MK4120J(1)
600	250	0.0015	K01	4	8	10	7.5	200	160	F426KF152J600(1)	PHE426MK4150J(1)
600	250	0.0018	K01	4	8	10	7.5	200	160	F426KF182J600(1)	PHE426MK4180J(1)
600	250	0.0022	K01	4	8	10	7.5	200	160	F426KF222J600(1)	PHE426MK4220J(1)
600	250	0.0027	K01	4	8	10	7.5	200	160	F426KF272J600(1)	PHE426MK4270J(1)
600	250	0.0033	K01	4	8	10	7.5	200	160	F426KF332J600(1)	PHE426MK4330J(1)
600	250	0.0039	K01	4	8	10	7.5	200	160	F426KF392J600(1)	PHE426MK4390J(1)
600	250	0.0047	K01	4	8	10	7.5	200	160	F426KF472J600(1)	PHE426MK4470J(1)
600	250	0.0056	K01	4	8	10	7.5	200	160	F426KF562J600(1)	PHE426MK4560J(1)
600	250	0.0068	K03	5	11	10	7.5	200	160	F426KK682J600(1)	PHE426MK4680J(1)
600	250	0.0082	K03	5	11	10	7.5	200	160	F426KK822J600(1)	PHE426MK4820J(1)
600	250	0.01	K03	5	11	10	7.5	200	160	F426KK103J600(1)	PHE426MK5100J(1)
600	250	0.012	K03	5	11	10	7.5	200	160	F426KK123J600(1)	PHE426MK5120J(1)
600	250	0.015	K04	6	12	10.5	7.5	200	160	F426KM153J600(1)	PHE426MK5150J(1)
600	250	0.018	K04	6	12	10.5	7.5	200	160	F426KM183J600(1)	PHE426MK5180J(1)
600	250	0.022	K04	6	12	10.5	7.5	200	160	F426KM223J600(1)	PHE426MK5220J(1)
600	250	0.027	K04	6	12	10.5	7.5	200	160	F426KM273J600(1)	PHE426MK5270J(1)
600	250	0.033	K04	6	12	10.5	7.5	200	160	F426KM333J600(1)	PHE426MK5330J(1)
600	250	0.01	A01	4	9	13	10	400	135	F426AG103J600(1)	PHE426MA5100J(1)
VDC	**VAC**	**Capacitance Value (µF)**	**Box Code**	**T (mm)**	**H (mm)**	**L (mm)**	**Lead Spacing (S)**	**dV/dt (V/µs)**	**Rthha °C/W 85°C 0.2m/s**	**KEMET Part Number**	**Legacy Part Number**

** Please note: These articles have a box code included in the article code.*
(1) Insert lead and packaging code. See Ordering Options Table for available options.

Table 1 – Ratings & Part Number Reference cont.

VDC	VAC	Capacitance Value (µF)	Box Code	Max Dimensions in mm			Lead Spacing (S)	dV/dt (V/µs)	Rthha °C/W 85°C 0.2m/s	KEMET Part Number	Legacy Part Number
				T	H	L					
600	250	0.012	A01	4	9	13	10	400	135	F426AG123J600(1)	PHE426MA5120J(1)
600	250	0.015	A01	4	9	13	10	400	135	F426AG153J600(1)	PHE426MA5150J(1)
600	250	0.018	A01	4	9	13	10	400	135	F426AG183J600(1)	PHE426MA5180J(1)
600	250	0.022	A02	4.5	10.5	13	10	400	120	F426AH223J600(1)	PHE426MA5220J(1)
600	250	0.027	A02	4.5	10.5	13	10	400	120	F426AH273J600(1)	PHE426MA5270J(1)
600	250	0.033	A03	5	11	13	10	400	113	F426AK333J600(1)	PHE426MA5330J(1)
600	250	0.039	A04	6	12	13	10	400	105	F426AP393J600(1)	PHE426MA5390J(1)
600	250	0.047	A04	6	12	13	10	400	105	F426AP473J600(1)	PHE426MA5470J(1)
600	250	0.033	B04	5.5	10.5	18	15	300	99	F426BD333J600(1)	PHE426MB5330J(1)
600	250	0.039	B04	5.5	10.5	18	15	300	99	F426BD393J600(1)	PHE426MB5390J(1)
600	250	0.047	B04	5.5	10.5	18	15	300	99	F426BD473J600(1)	PHE426MB5470J(1)
600	250	0.056	B05	5.5	12.5	18	15	300	85	F426BE563J600(1)	PHE426MB5560J(1)
600	250	0.068	B15	6	12	18	15	300	83	F426BG683J600(1)	PHE426MB5680J(1)
600	250	0.082	B10	6.5	12.5	18	15	300	84	F426BJ823J600(1)	PHE426MB5820J(1)
600	250	0.1	B06	7.5	14.5	18	15	300	74	F426BL104J600(1)	PHE426MB6100J(1)
600	250	0.12	B06	7.5	14.5	18	15	300	74	F426BL124J600(1)	PHE426MB6120J(1)
600	250	0.15	B11	8.5	16	18	15	300	64	F426BQ154J600(1)	PHE426MB6150J(1)
600	250	0.18	B14	9.5	17.5	18	15	300	60	F426BV184J600(1)	PHE426MB6180J(1)
600	250	0.22	B14	9.5	17.5	18	15	300	60	F426BV224J600(1)	PHE426MB6220J(1)
600	250	0.1	D13	6.5	14.5	26	22.5	200	58	F426DD104J600(1)	PHE426MD6100J(1)
600	250	0.12	D13	6.5	14.5	26	22.5	200	58	F426DD124J600(1)	PHE426MD6120J(1)
600	250	0.15	D13	6.5	14.5	26	22.5	200	58	F426DD154J600(1)	PHE426MD6150J(1)
600	250	0.18	D17	7	16.5	26	22.5	200	53	F426DF184J600(1)	PHE426MD6180J(1)
600	250	0.22	D14	8	16	26	22.5	200	53	F426DH224J600(1)	PHE426MD6220J(1)
600	250	0.27	D15	9	18.5	26	22.5	200	48	F426DM274J600(1)	PHE426MD6270J(1)
600	250	0.33	D15	9	18.5	26	22.5	200	48	F426DM334J600(1)	PHE426MD6330J(1)
600	250	0.39	D18	10.5	19	26	22.5	200	45	F426DR394J600(1)	PHE426MD6390J(1)
600	250	0.47	D16	11	21.5	26	22.5	200	40	F426DT474J600(1)	PHE426MD6470J(1)
600	250	0.56	D20	13.5	23	26	22.5	200	40	F426DW564J600(1)	PHE426MD6560J(1)
600	250	0.68	D19	15.5	24.5	26	22.5	200	40	F426DY684J600(1)	PHE426MD6680J(1)
600	250	0.82	D19	15.5	24.5	26	22.5	200	40	F426DY824J600(1)	PHE426MD6820J(1)
600	250	0.33	F11	10.5	20.5	31.5	27.5	140	37	F426FE334J600(1)	PHE426MF6330J(1)
600	250	0.39	F11	10.5	20.5	31.5	27.5	140	37	F426FE394J600(1)	PHE426MF6390J(1)
600	250	0.47	F11	10.5	20.5	31.5	27.5	140	37	F426FE474J600(1)	PHE426MF6470J(1)
600	250	0.56	F12	11.5	22.5	31.5	27.5	140	34	F426FG564J600(1)	PHE426MF6560J(1)
600	250	0.56	F17	21	12.5	31.5	27.5	140	34	F426TH564J600(1)	PHE426MT6560J(1)
600	250	0.68	F12	11.5	22.5	31.5	27.5	140	34	F426FG684J600(1)	PHE426MF6680J(1)
600	250	0.82	F03	13.5	23	31.5	27.5	140	33	F426FK824J600(1)	PHE426MF6820J(1)
600	250	1	F13	14.5	24.5	31.5	27.5	140	32	F426FM105J600(1)	PHE426MF7100J(1)
600	250	1.2	F14	17.5	28	31.5	27.5	140	28	F426FR125J600(1)	PHE426MF7120J(1)
600	250	1.2	F19	27.5	16	31.5	27.5	140	28	F426TQ125J600(1)	PHE426MT7120J(1)
600	250	1.5	F15	19	29	31.5	27.5	140	26	F426FS155J600(1)	PHE426MF7150J(1)
600	250	1.8	F16	21	30	31.5	27.5	140	26	F426FV185J600(1)	PHE426MF7180J(1)
600	250	1.8	F18	31	19	31.5	27.5	140	26	F426TT185J600(1)	PHE426MT7180J(1)
600	250	0.82	R05	13	24	41	37.5	80	27	F426RF824J600(1)	PHE426MR6820J(1)
600	250	1	R05	13	24	41	37.5	80	27	F426RF105J600(1)	PHE426MR7100J(1)
600	250	1.2	R04	15	26	41	37.5	80	25	F426RH125J600(1)	PHE426MR7120J(1)
600	250	1.5	R04	15	26	41	37.5	80	25	F426RH155J600(1)	PHE426MR7150J(1)
600	250	1.8	R02	16.5	32	41	37.5	80	21	F426RD185J600(1)	PHE426MR7180J(1)
600	250	2.2	R02	16.5	32	41	37.5	80	21	F426RD225J600(1)	PHE426MR7220J(1)
600	250	2.7	R03	19	36	41	37.5	80	19	F426RM275J600(1)	PHE426MR7270J(1)
600	250	3.3	R03	19	36	41	37.5	80	19	F426RM335J600(1)	PHE426MR7330J(1)
600	250	3.9	R06	21	38	41	37.5	80	17	F426RP395J600(1)	PHE426MR7390J(1)
VDC	**VAC**	**Capacitance Value (µF)**	**Box Code**	**T (mm)**	**H (mm)**	**L (mm)**	**Lead Spacing (S)**	**dV/dt (V/µs)**	**Rthha °C/W 85°C 0.2m/s**	**KEMET Part Number**	**Legacy Part Number**

** Please note: These articles have a box code included in the article code.*
(1) Insert lead and packaging code. See Ordering Options Table for available options.

Table 1 – Ratings & Part Number Reference cont.

VDC	VAC	Capacitance Value (µF)	Box Code	Max Dimensions in mm			Lead Spacing (S)	dV/dt (V/µs)	Rthha °C/W 85°C 0.2m/s	KEMET Part Number	Legacy Part Number
				T	H	L					
600	250	4.7	R08	28	43	41	37.5	80	17	F426RS475J600(1)	PHE426MR7470J(1)
600	250	5.6	R08	28	43	41	37.5	80	17	F426RS565J600(1)	PHE426MR7560J(1)
1000	250	0.0027	A01	4	9	13	10	600	135	F426AG272J1K0(1)	PHE426PA4270J(1)
1000	250	0.0033	A01	4	9	13	10	600	135	F426AG332J1K0(1)	PHE426PA4330J(1)
1000	250	0.0047	A01	4	9	13	10	600	135	F426AG472J1K0(1)	PHE426PA4470J(1)
1000	250	0.0056	A02	4.5	10.5	13	10	600	120	F426AH562J1K0(1)	PHE426PA4560J(1)
1000	250	0.0068	A02	4.5	10.5	13	10	600	120	F426AH682J1K0(1)	PHE426PA4680J(1)
1000	250	0.0082	A03	5	11	13	10	600	113	F426AK822J1K0(1)	PHE426PA4820J(1)
1000	250	0.01	A03	5	11	13	10	600	113	F426AK103J1K0(1)	PHE426PA5100J(1)
1000	250	0.012	A04	6	12	13	10	600	105	F426AP123J1K0(1)	PHE426PA5120J(1)
1000	250	0.015	A04	6	12	13	10	600	105	F426AP153J1K0(1)	PHE426PA5150J(1)
1000	250	0.01	B04	5.5	10.5	18	15	450	99	F426BD103J1K0(1)	PHE426PB5100J(1)
1000	250	0.012	B04	5.5	10.5	18	15	450	99	F426BD123J1K0(1)	PHE426PB5120J(1)
1000	250	0.015	B04	5.5	10.5	18	15	450	99	F426BD153J1K0(1)	PHE426PB5150J(1)
1000	250	0.018	B05	5.5	12.5	18	15	450	85	F426BE183J1K0(1)	PHE426PB5180J(1)
1000	250	0.022	B05	5.5	12.5	18	15	450	85	F426BE223J1K0(1)	PHE426PB5220J(1)
1000	250	0.027	B15	6	12	18	15	450	83	F426BG273J1K0(1)	PHE426PB5270J(1)
1000	250	0.033	B10	6.5	12.5	18	15	450	84	F426BJ333J1K0(1)	PHE426PB5330J(1)
1000	250	0.039	B06	7.5	14.5	18	15	450	74	F426BL393J1K0(1)	PHE426PB5390J(1)
1000	250	0.047	B06	7.5	14.5	18	15	450	74	F426BL473J1K0(1)	PHE426PB5470J(1)
1000	250	0.056	B11	8.5	16	18	15	450	64	F426BQ563J1K0(1)	PHE426PB5560J(1)
1000	250	0.068	B14	9.5	17.5	18	15	450	60	F426BV683J1K0(1)	PHE426PB5680J(1)
1000	250	0.082	B14	9.5	17.5	18	15	450	60	F426BV823J1K0(1)	PHE426PB5820J(1)
1000	250	0.1	B14	9.5	17.5	18	15	450	60	F426BV104J1K0(1)	PHE426PB6100J(1)
1000	250	0.033	D13	6.5	14.5	26	22.5	300	58	F426DD333J1K0(1)	PHE426PD5330J(1)
1000	250	0.039	D13	6.5	14.5	26	22.5	300	58	F426DD393J1K0(1)	PHE426PD5390J(1)
1000	250	0.047	D13	6.5	14.5	26	22.5	300	58	F426DD473J1K0(1)	PHE426PD5470J(1)
1000	250	0.056	D17	7	16.5	26	22.5	300	53	F426DF563J1K0(1)	PHE426PD5560J(1)
1000	250	0.068	D17	7	16.5	26	22.5	300	53	F426DF683J1K0(1)	PHE426PD5680J(1)
1000	250	0.082	D14	8	16	26	22.5	300	53	F426DH823J1K0(1)	PHE426PD5820J(1)
1000	250	0.1	D15	9	18.5	26	22.5	300	48	F426DM104J1K0(1)	PHE426PD6100J(1)
1000	250	0.12	D15	9	18.5	26	22.5	300	48	F426DM124J1K0(1)	PHE426PD6120J(1)
1000	250	0.15	D18	10.5	19	26	22.5	300	45	F426DR154J1K0(1)	PHE426PD6150J(1)
1000	250	0.18	D16	11	21.5	26	22.5	300	40	F426DT184J1K0(1)	PHE426PD6180J(1)
1000	250	0.22	D16	11	21.5	26	22.5	300	40	F426DT224J1K0(1)	PHE426PD6220J(1)
1000	250	0.27	D19	15.5	24.5	26	22.5	300	40	F426DY274J1K0(1)	PHE426PD6270J(1)
1000	250	0.1	F11	10.5	20.5	31.5	27.5	180	37	F426FE104J1K0(1)	PHE426PF6100J(1)
1000	250	0.12	F11	10.5	20.5	31.5	27.5	180	37	F426FE124J1K0(1)	PHE426PF6120J(1)
1000	250	0.15	F11	10.5	20.5	31.5	27.5	180	37	F426FE154J1K0(1)	PHE426PF6150J(1)
1000	250	0.18	F11	10.5	20.5	31.5	27.5	180	37	F426FE184J1K0(1)	PHE426PF6180J(1)
1000	250	0.18	F17	21	12.5	31.5	27.5	180	37	F426TH184J1K0(1)	PHE426PT6180J(1)
1000	250	0.22	F12	11.5	22.5	31.5	27.5	180	34	F426FG224J1K0(1)	PHE426PF6220J(1)
1000	250	0.27	F03	13.5	23	31.5	27.5	180	33	F426FK274J1K0(1)	PHE426PF6270J(1)
1000	250	0.33	F13	14.5	24.5	31.5	27.5	180	32	F426FM334J1K0(1)	PHE426PF6330J(1)
1000	250	0.39	F14	17.5	28	31.5	27.5	180	28	F426FR394J1K0(1)	PHE426PF6390J(1)
1000	250	0.39	F19	27.5	16	31.5	27.5	180	28	F426TQ394J1K0(1)	PHE426PT6390J(1)
1000	250	0.47	F14	17.5	28	31.5	27.5	180	28	F426FR474J1K0(1)	PHE426PF6470J(1)
1000	250	0.56	F15	19	29	31.5	27.5	180	26	F426FS564J1K0(1)	PHE426PF6560J(1)
1000	250	0.56	F18	31	19	31.5	27.5	180	26	F426TT564J1K0(1)	PHE426PT6560J(1)
1000	250	0.68	F16	21	30	31.5	27.5	180	26	F426FV684J1K0(1)	PHE426PF6680J(1)
1000	250	0.33	R05	13	24	41	37.5	100	27	F426RF334J1K0(1)	PHE426PR6330J(1)
1000	250	0.39	R05	13	24	41	37.5	100	27	F426RF394J1K0(1)	PHE426PR6390J(1)
1000	250	0.47	R04	15	26	41	37.5	100	25	F426RH474J1K0(1)	PHE426PR6470J(1)
VDC	**VAC**	**Capacitance Value (µF)**	**Box Code**	**T (mm)**	**H (mm)**	**L (mm)**	**Lead Spacing (S)**	**dV/dt (V/µs)**	**Rthha °C/W 85°C 0.2m/s**	**KEMET Part Number**	**Legacy Part Number**

** Please note: These articles have a box code included in the article code.*
(1) Insert lead and packaging code. See Ordering Options Table for available options.

Table 1 – Ratings & Part Number Reference cont.

VDC	VAC	Capacitance Value (µF)	Box Code	Max Dimensions in mm			Lead Spacing (S)	dV/dt (V/µs)	Rthha °C/W 85°C 0.2m/s	KEMET Part Number	Legacy Part Number
				T	H	L					
1000	250	0.56	R04	15	26	41	37.5	100	25	F426RH564J1K0(1)	PHE426PR6560J(1)
1000	250	0.68	R02	16.5	32	41	37.5	100	21	F426RD684J1K0(1)	PHE426PR6680J(1)
1000	250	0.82	R02	16.5	32	41	37.5	100	21	F426RD824J1K0(1)	PHE426PR6820J(1)
1000	250	1	R03	19	36	41	37.5	100	19	F426RM105J1K0(1)	PHE426PR7100J(1)
1000	250	1.2	R03	19	36	41	37.5	100	19	F426RM125J1K0(1)	PHE426PR7120J(1)
1000	250	1.5	R03	19	36	41	37.5	100	19	F426RM155J1K0C	PHE426PR7150JR03R06L2*
1000	250	1.8	R06	21	38	41	37.5	100	17	F426RP185J1K0(1)	PHE426PR7180J(1)
1000	250	2.2	R06	21	38	41	37.5	100	17	F426RP225J1000C	PHE426PR7220JR06R06L2*
1000	250	2.7	R08	28	43	41	37.5	100	15	F426RS275J1K0(1)	PHE426PR7270J(1)
1000	250	3.3	R08	28	43	41	37.5	100	15	F426RS335J1K0(1)	PHE426PR7330J(1)
2 Sections											
1600	650	0.0047	B04	5.5	10.5	18	15	1500	99	F426BD472J1K6(1)	PHE426RB4470J(1)
1600	650	0.0056	B04	5.5	10.5	18	15	1500	99	F426BD562J1K6(1)	PHE426RB4560J(1)
1600	650	0.0068	B04	5.5	10.5	18	15	1500	99	F426BD682J1K6(1)	PHE426RB4680J(1)
1600	650	0.0082	B05	5.5	12.5	18	15	1500	85	F426BE822J1K6(1)	PHE426RB4820J(1)
1600	650	0.01	B05	5.5	12.5	18	15	1500	85	F426BE103J1K6(1)	PHE426RB5100J(1)
1600	650	0.012	B10	6.5	12.5	18	15	1500	84	F426BJ123J1K6(1)	PHE426RB5120J(1)
1600	650	0.015	B06	7.5	14.5	18	15	1500	74	F426BL153J1K6(1)	PHE426RB5150J(1)
1600	650	0.018	B06	7.5	14.5	18	15	1500	74	F426BL183J1K6(1)	PHE426RB5180J(1)
1600	650	0.022	B12	8	15	18	15	1500	71	F426BM223J1K6(1)	PHE426RB5220J(1)
1600	650	0.027	B14	9.5	17.5	18	15	1500	60	F426BV273J1K6(1)	PHE426RB5270J(1)
1600	650	0.033	B14	9.5	17.5	18	15	1500	60	F426BV333J1K6(1)	PHE426RB5330J(1)
1600	650	0.039	B16	11	19	18	15	1500	59	F426BY393J1K6(1)	PHE426RB5390J(1)
1600	650	0.047	B16	11	19	18	15	1500	59	F426BY473J1K6(1)	PHE426RB5470J(1)
2000	700	0.001	B04	5.5	10.5	18	15	1500	99	F426BD102J2K0(1)	PHE426SB4100J(1)
2000	700	0.0012	B04	5.5	10.5	18	15	1500	99	F426BD122J2K0(1)	PHE426SB4120J(1)
2000	700	0.0015	B04	5.5	10.5	18	15	1500	99	F426BD152J2K0(1)	PHE426SB4150J(1)
2000	700	0.0018	B04	5.5	10.5	18	15	1500	99	F426BD182J2K0(1)	PHE426SB4180J(1)
2000	700	0.0022	B04	5.5	10.5	18	15	1500	99	F426BD222J2K0(1)	PHE426SB4220J(1)
2000	700	0.0027	B04	5.5	10.5	18	15	1500	99	F426BD272J2K0(1)	PHE426SB4270J(1)
2000	700	0.0033	B04	5.5	10.5	18	15	1500	99	F426BD332J2K0(1)	PHE426SB4330J(1)
2000	700	0.0039	B04	5.5	10.5	18	15	1500	99	F426BD392J2K0(1)	PHE426SB4390J(1)
2000	700	0.0047	B05	5.5	12.5	18	15	1500	85	F426BE472J2K0(1)	PHE426SB4470J(1)
2000	700	0.0056	B05	5.5	12.5	18	15	1500	85	F426BE562J2K0(1)	PHE426SB4560J(1)
2000	700	0.0068	B10	6.5	12.5	18	15	1500	84	F426BJ682J2K0(1)	PHE426SB4680J(1)
2000	700	0.0082	B06	7.5	14.5	18	15	1500	74	F426BL822J2K0(1)	PHE426SB4820J(1)
2000	700	0.01	B06	7.5	14.5	18	15	1500	74	F426BL103J2K0(1)	PHE426SB5100J(1)
2000	700	0.012	B12	8	15	18	15	1500	71	F426BM123J2K0(1)	PHE426SB5120J(1)
2000	700	0.015	B11	8.5	16	18	15	1500	64	F426BQ153J2K0(1)	PHE426SB5150J(1)
2000	700	0.018	B14	9.5	17.5	18	15	1500	60	F426BV183J2K0(1)	PHE426SB5180J(1)
2000	700	0.022	B16	11	19	18	15	1500	59	F426BY223J2K0(1)	PHE426SB5220J(1)
2000	700	0.027	B16	11	19	18	15	1500	59	F426BY273J2K0(1)	PHE426SB5270J(1)
VDC	**VAC**	**Capacitance Value (µF)**	**Box Code**	**T (mm)**	**H (mm)**	**L (mm)**	**Lead Spacing (S)**	**dV/dt (V/µs)**	**Rthha °C/W 85°C 0.2m/s**	**KEMET Part Number**	**Legacy Part Number**

** Please note: These articles have a box code included in the article code.*
(1) Insert lead and packaging code. See Ordering Options Table for available options.

Soldering Process

The implementation of the RoHS directive has resulted in the selection of SnAgCu (SAC) alloys or SnCu alloys as primary solder. This has increased the liquidus temperature from that of 183°C for SnPb eutectic alloy to 217 – 221°C for the new alloys. As a result, the heat stress to the components, even in wave soldering, has increased considerably due to higher pre-heat and wave temperatures. Polypropylene capacitors are especially sensitive to heat (the melting point of polypropylene is 160 – 170°C). Wave soldering can be destructive, especially for mechanically small polypropylene capacitors (with lead spacing of 5 – 15 mm), and great care has to be taken during soldering. The recommended solder profiles from KEMET should be used. Please consult KEMET with any questions. In general, the wave soldering curve from IEC Publication 61760–1 Edition 2 serves as a solid guideline for successful soldering. Please see Figure 1.

Reflow soldering is not recommended for through-hole film capacitors. Exposing capacitors to a soldering profile in excess of the above the recommended limits may result to degradation or permanent damage to the capacitors.

Do not place the polypropylene capacitor through an adhesive curing oven to cure resin for surface mount components. Insert through-hole parts after the curing of surface mount parts. Consult KEMET to discuss the actual temperature profile in the oven, if through-hole components must pass through the adhesive curing process. A maximum two soldering cycles is recommended. Please allow time for the capacitor surface temperature to return to a normal temperature before the second soldering cycle.

Manual Soldering Recommendations

Following is the recommendation for manual soldering with a soldering iron.

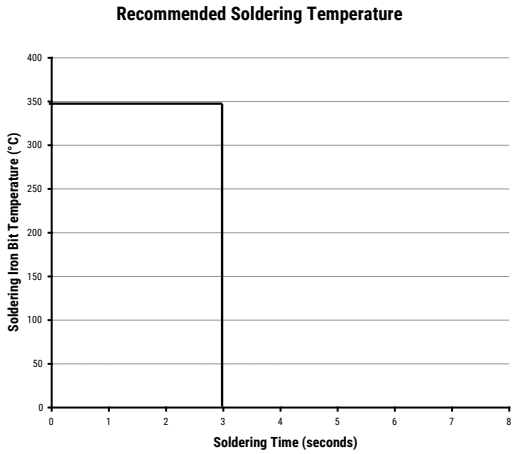

The soldering iron tip temperature should be set at 350°C (+10°C maximum) with the soldering duration not to exceed more than 3 seconds.

Wave Soldering Recommendations

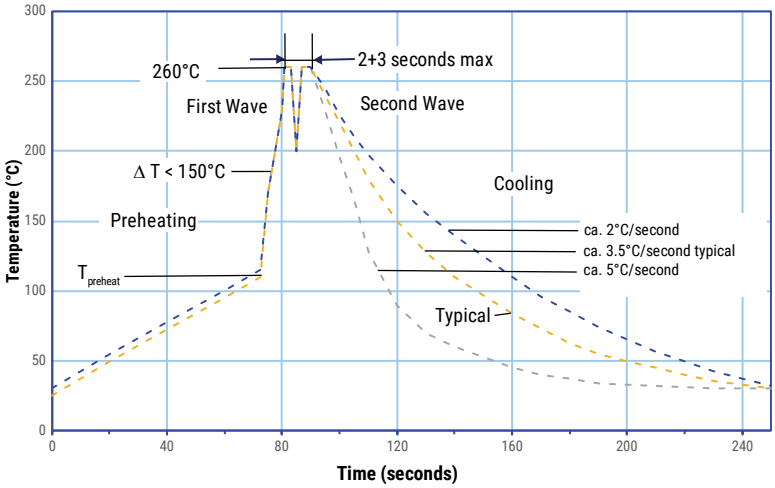

Soldering Process cont.

Wave Soldering Recommendations cont.

1. The table indicates the maximum set-up temperature of the soldering process
Figure 1

Dielectric Film Material	Maximum Preheat Temperature			Maximum Peak Soldering Temperature	
	Capacitor Pitch ≤ 10 mm	Capacitor Pitch = 15 mm	Capacitor Pitch > 15 mm	Capacitor Pitch ≤ 15 mm	Capacitor Pitch > 15 mm
Polyester	130°C	130°C	130°C	270°C	270°C
Polypropylene	100°C	110°C	130°C	260°C	270°C
Paper	130°C	130°C	140°C	270°C	270°C
Polyphenylene Sulphide	150°C	150°C	160°C	270°C	270°C

2. The maximum temperature measured inside the capacitor:
   Set the temperature so that inside the element the maximum temperature is below the limit:

Dielectric Film Material	Maximum temperature measured inside the element
Polyester	160°C
Polypropylene	110°C
Paper	160°C
Polyphenylene Sulphide	160°C

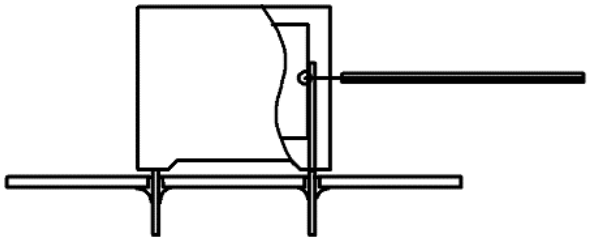

Temperature monitored inside the capacitor.

Selective Soldering Recommendations

Selective dip soldering is a variation of reflow soldering. In this method, the printed circuit board with through-hole components to be soldered is preheated and transported over the solder bath as in normal flow soldering without touching the solder. When the board is over the bath, it is stopped and pre-designed solder pots are lifted from the bath with molten solder only at the places of the selected components, and pressed against the lower surface of the board to solder the components.

The temperature profile for selective soldering is similar to the double wave flow soldering outlined in this document, **however, instead of two baths, there is only one bath with a time from 3 to 10 seconds.** In selective soldering, the risk of overheating is greater than in double wave flow soldering, and great care must be taken so that the parts are not overheated.

Construction

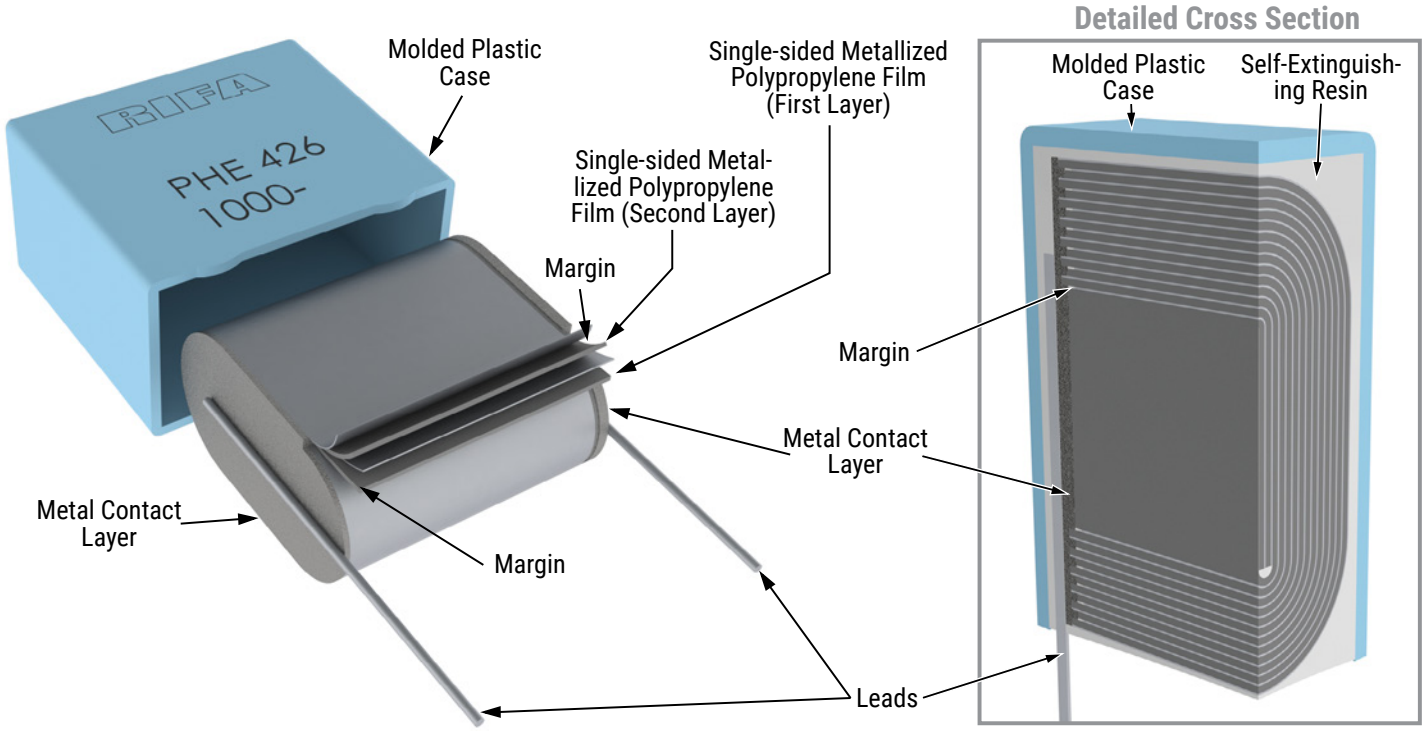

Winding Schemes

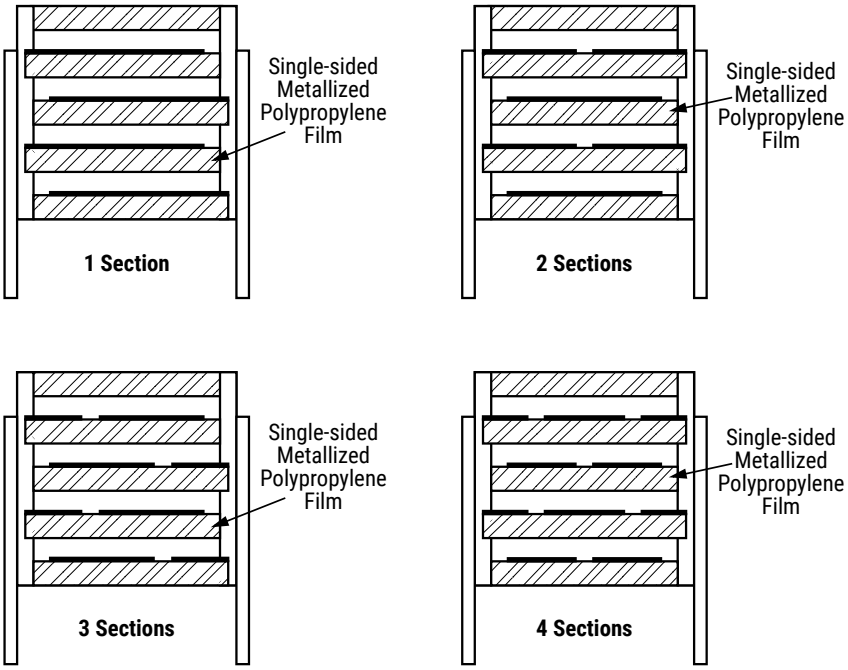

Marking

Variant 1, Pitch > 10 mm:

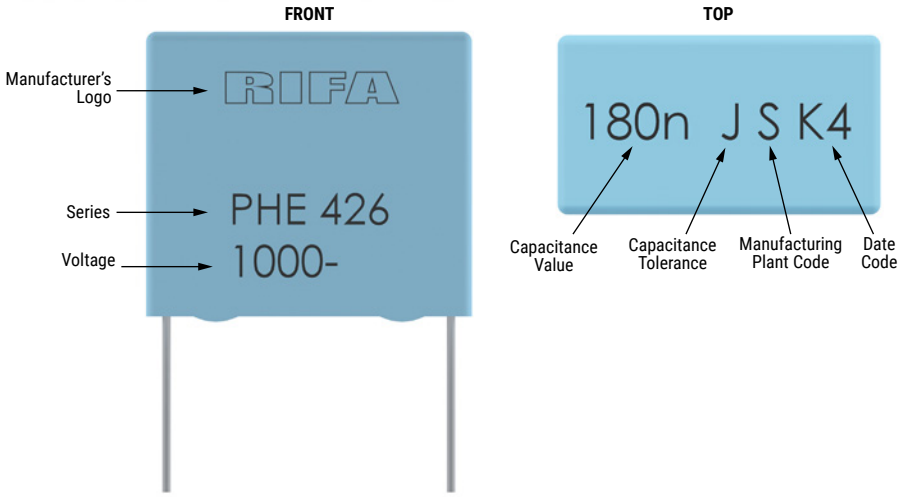

Variant 2, Pitch 7.5 to 27.5 mm:

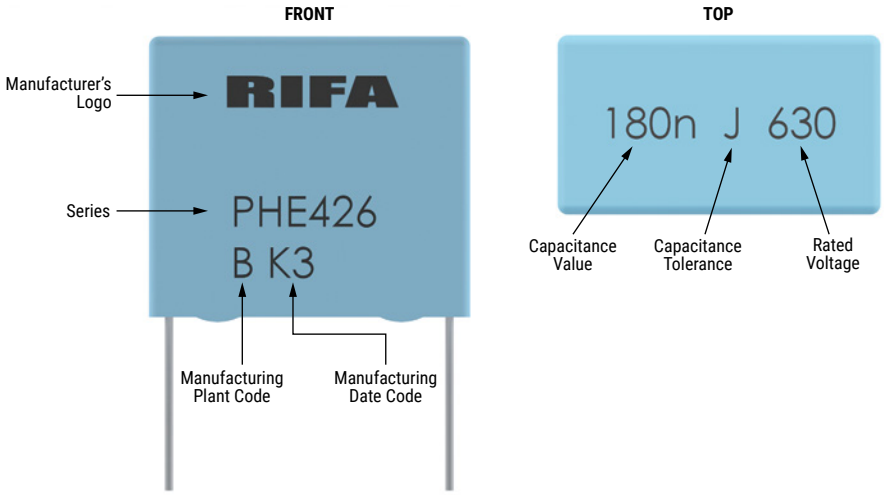

Manufacturing Date Code (IEC–60062)							
Year	**Code**	**Year**	**Code**	**Month**	**Code**	**Month**	**Code**
2010	A	2020	M	January	1	July	7
2011	B	2021	N	February	2	August	8
2012	C	2022	P	March	3	September	9
2013	D	2023	R	April	4	October	O
2014	E	2024	S	May	5	November	N
2015	F	2025	T	June	6	December	D
2016	H	2026	U				
2017	J	2027	V				
2018	K	2028	W				
2019	L	2029	X				

Packaging Quantities

Size Code	Lead Spacing	Thickness (mm)	Height (mm)	Length (mm)	Bulk Short Leads	Bulk Long Leads	Standard Reel ø 355 mm	Large Reel ø 500 mm	Ammo	Pizza
JF	5	2.5	6.5	7.2	3,000	4,000	2,500		3,500	
JJ		3.5	8.0	7.2	2,000	2,000	2,000		2,000	
JL		4.5	9	7.2	1,000	1,000	1,500		1,700	
JQ		5	10	7.2	1,000	1,500	1,200		1,700	
JT		6	11	7.2	2,000	1,000	1,000		1,400	
JU		7.2	13	7.2	1,500	750	800		1,150	
KG	7.5	4	8	10	1,000	1,000	1,700	3,400	1,900	
KK		5	11	10	1,000	1,000	1,300	2,600	1,500	
KM		6	12	10.5	1,000	1,000	1,000	2,000	1,200	
AG	10	4	9	13	1,000	1,000	900	1,800		
AH		4.5	10.5	13	1,000	1,000	800	1,600		
AK		5	11	13	800	800	700	1,400		
AP		6	12	13	600	600	500	1,000		
BD	15	5.5	10.5	18	1,000	800	600	1,200		
BE		5.5	12.5	18	1,000	800	600	1,200		
BL		7.5	14.5	18	800	400	400	800		
BJ		6.5	12.5	18	1,000	600	500	1,000		
BQ		8.5	16	18	600	400	400	800		
BM		8	15	18	600	400	400	800		
BV		9.5	17.5	18	500	300	350	700		
BG		6	12	18	1,000	800	500	1,000		
BY		11	19	18	450	250	300	600		

Packaging Quantities cont.

Size Code	Lead Spacing	Thickness (mm)	Height (mm)	Length (mm)	Bulk Short Leads	Bulk Long Leads	Standard Reel ø 355 mm	Large Reel ø 500 mm	Ammo	Pizza
DD	22.5	6.5	14.5	26	234		300	600		440
DH		8	16	26	186		250	500		352
DM		9	18.5	26			250	500		308
DT		11	21.5	26			200	400		253
DF		7	16.5	26	216		300	600		396
DR		10.5	19	26			200	400		264
DY		15.5	24.5	26			110	250		176
DW		13.5	23	26			160	300		209
FK	27.5	13.5	23	31.5				250		171
FE		10.5	20.5	31.5				350		216
FG		11.5	22.5	31.5				300		198
FM		14.5	24.5	31.5				250		153
FR		17.5	28	31.5						126
FS		19	29	31.5						117
FV		21	30	31.5						108
FH		21	12.5	31.5						108
FT		31	19	31.5						72
FQ		27.5	16	31.5						81
RK	37.5	16.5	32	41						105
RM		19	36	41						91
RH		15	26	41						119
RF		13	24	41						140
RP		21	38	41						84
RS		28	43	41						63

Lead Taping & Packaging (IEC 60286–2)

Lead Spacing 5 mm

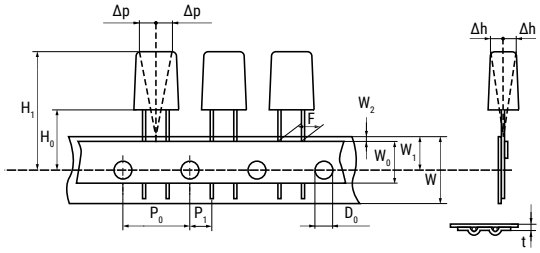

Lead Spacing 7.5 mm

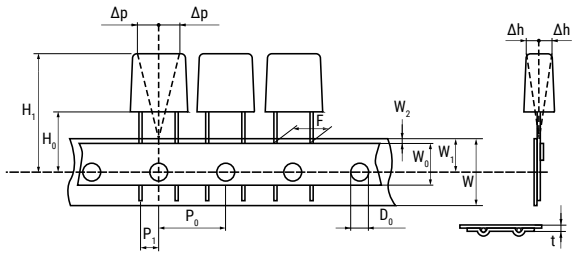

Lead Spacing 10 – 15 mm

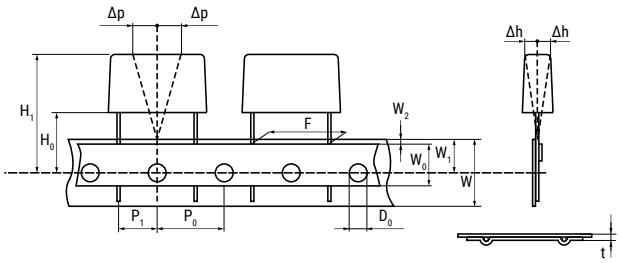

Lead Spacing 22.5 – 27.5 mm

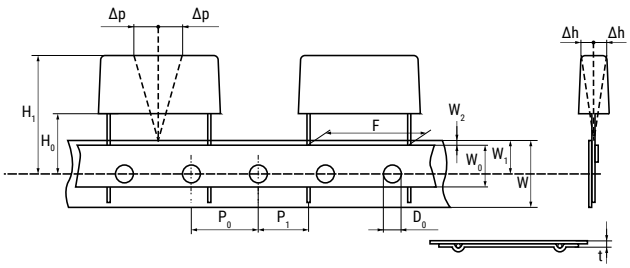

Taping Specification

Dimensions in mm									Standard IEC 60286–2
Lead Spacing	+0.6/−0.1	F	5.0	7.5	10.0	15.0	22.5	27.5	F
Carrier Tape Width	+1/−0.5	W	18.0	18.0	18.0	18.0	18.0	18.0	$18^{+1/-0.5}$
Hold-Down Tape Width	Minimum	W_0	6.0	6.0	9.0	10.0	10.0	10.0	
Position of Sprocket Hole	±0.5	W_1	9.0	9.0	9.0	9.0	9.0	9.0	$9^{+0.75/-0.5}$
Distance Between Tapes	Maximum	W_2	3.0	3.0	3.0	3.0	3.0	3.0	3.0
Sprocket Hole Diameter	±0.2	D_0	4.0	4.0	4.0	4.0	4.0	4.0	4.0
Feed Hole Lead Spacing	±0.2(1)	P_0(3)	12.7	12.7	12.7	12.7	12.7	12.7	12.7
Distance Lead – Feed Hole	±0.7	P_1	3.85	3.75	7.7	5.2	7.8	5.3	P^1
Deviation Tape – Plane	Maximum	Δp	1.3	1.3	1.3	1.3	1.3	1.3	1.3
Lateral Deviation	±2	Δh	2.0	2.0	2.0	2.0	2.0	2.0	2.0
Total Thickness	±0.2	t	0.7	0.7	0.7	0.7	0.9^{MAX}	0.9^{MAX}	0.9^{MAX}
Sprocket Hole/Cap Body	±0.5	H_0(2)	$18.5^{\pm0.5}$	$18.5^{\pm0.5}$	$18.5^{\pm0.5}$	$18.5^{\pm0.5}$	$18.5^{\pm0.5}$	$18.5^{\pm0.5}$	$18^{+2/-0}$

(1) Maximum cumulative feed hole error, 1 mm per 20 parts.
(2) 16.5 mm available on request.
(3) 15 mm available on request (F ≥ 10 mm).

Lead Taping & Packaging (IEC 60286–2) cont.

Ammo Specifications

Series	Dimensions (mm)		
	H	W	T
F5A, F5B, F5D	360	340	59
F6xx, F8xx			
PHExxx, PMExxx, PMRxxx	330	330	50

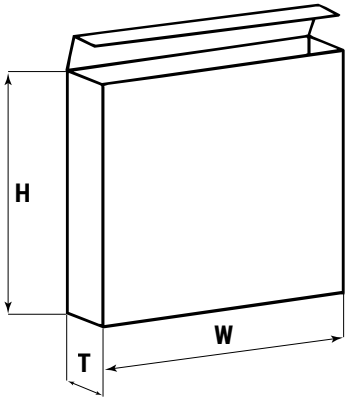

Reel Specifications

Series	Dimensions (mm)		
	D	H	W
F5A, F5B, F5D	355	30	55 (Max)
F6xx, F8xx	500	25	
PHExxx, PMExxx, PMRxxx	360 500	30	46 (Max)

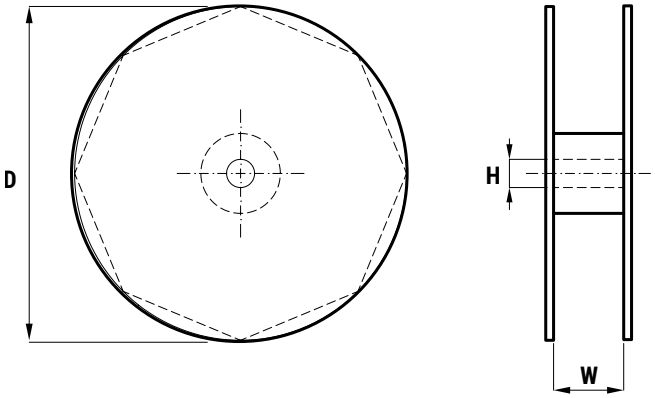

KEMET Electronics Corporation Sales Offices

For a complete list of our global sales offices, please visit www.kemet.com/sales.

Disclaimer

YAGEO Corporation and its affiliates do not recommend the use of commercial or automotive grade products for high reliability applications or manned space flight.

All product specifications, statements, information and data (collectively, the "Information") in this datasheet are subject to change. The customer is responsible for checking and verifying the extent to which the Information contained in this publication is applicable to an order at the time the order is placed. All Information given herein is believed to be accurate and reliable, but it is presented without guarantee, warranty, or responsibility of any kind, expressed or implied.

Statements of suitability for certain applications are based on KEMET Electronics Corporation's ("KEMET") knowledge of typical operating conditions for such applications, but are not intended to constitute – and KEMET specifically disclaims – any warranty concerning suitability for a specific customer application or use. The Information is intended for use only by customers who have the requisite experience and capability to determine the correct products for their application. Any technical advice inferred from this Information or otherwise provided by KEMET with reference to the use of KEMET's products is given gratis, and KEMET assumes no obligation or liability for the advice given or results obtained.

Although KEMET designs and manufactures its products to the most stringent quality and safety standards, given the current state of the art, isolated component failures may still occur. Accordingly, customer applications which require a high degree of reliability or safety should employ suitable designs or other safeguards (such as installation of protective circuitry or redundancies) in order to ensure that the failure of an electrical component does not result in a risk of personal injury or property damage.

Although all product–related warnings, cautions and notes must be observed, the customer should not assume that all safety measures are indicated or that other measures may not be required.

Additional information about production site flexibility can be found <here>

KEMET is a registered trademark of KEMET Electronics Corporation.